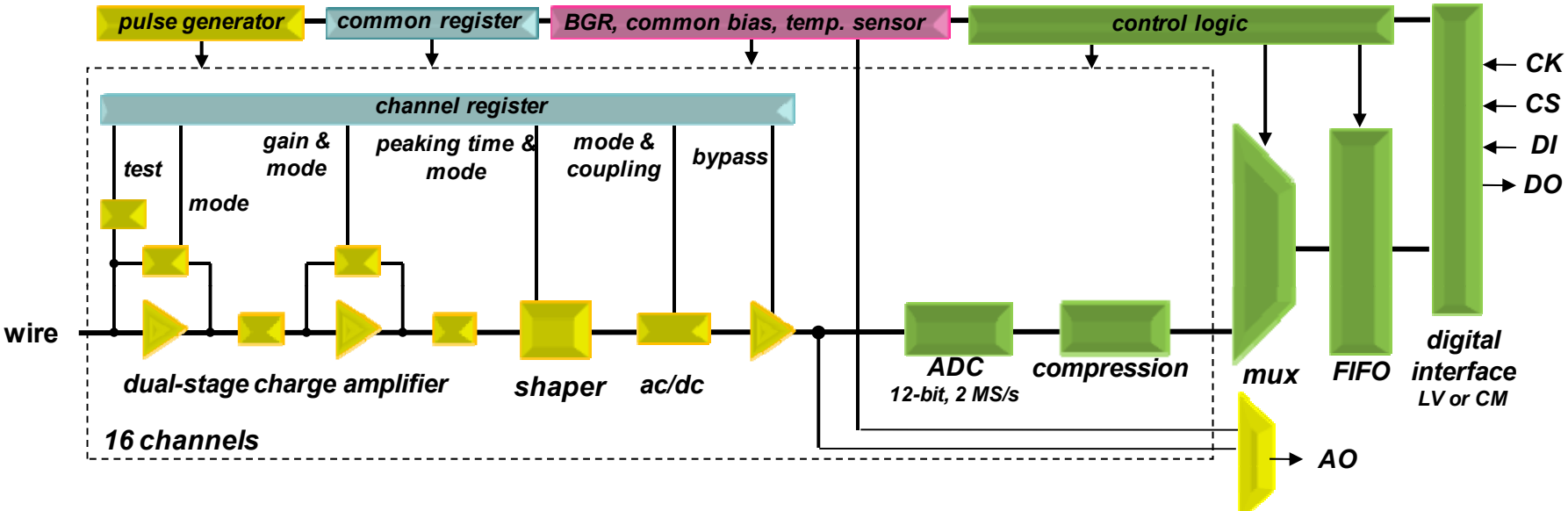
pulse generator
common register
BGR, common bias, temp. sensor
control logic
channel register
test
mode
gain & mode
peaking time & mode
mode & coupling
bypass
wire
dual-stage charge amplifier
shaper
ac/dc
ADC
12-bit, 2 MS/s
compression
mux
FIFO
digital interface
LV or CM
CK
CS
DI
DO
AO
16 channels