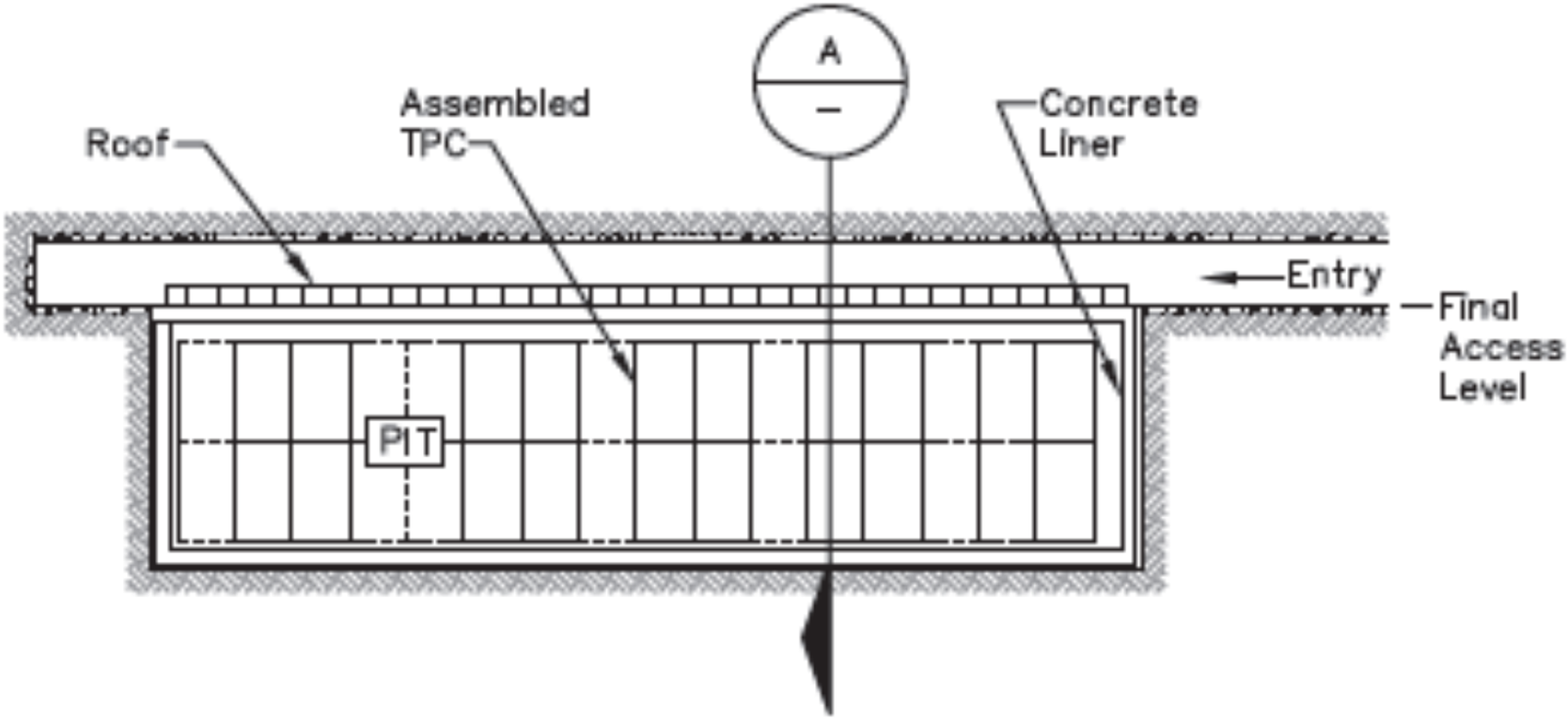

Long Section

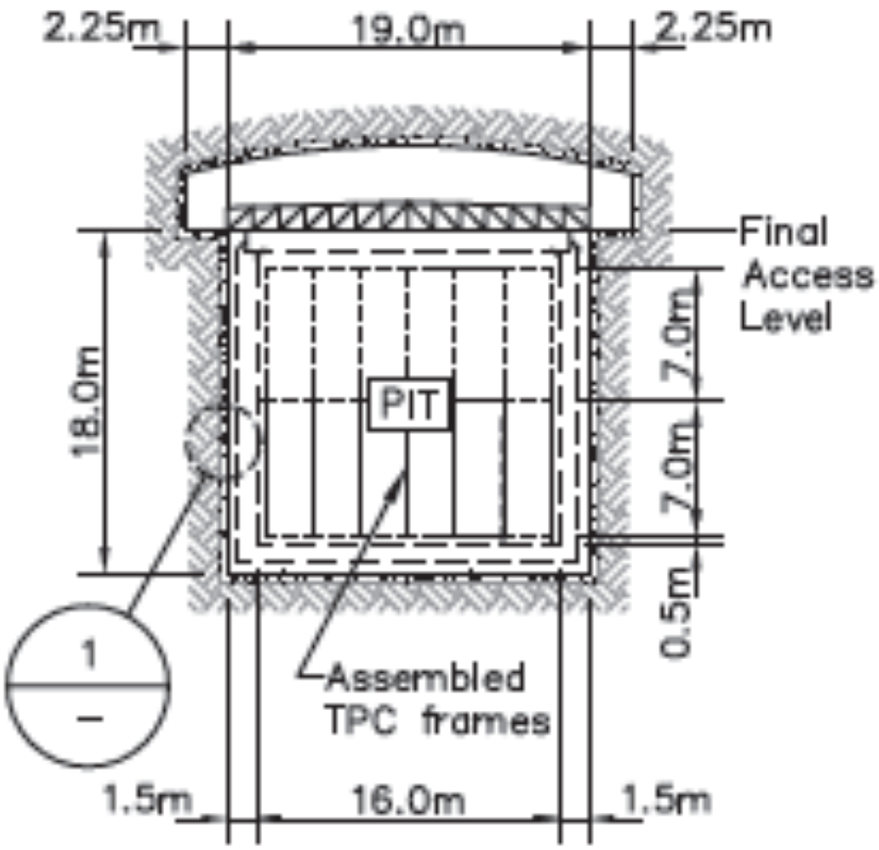

Section A

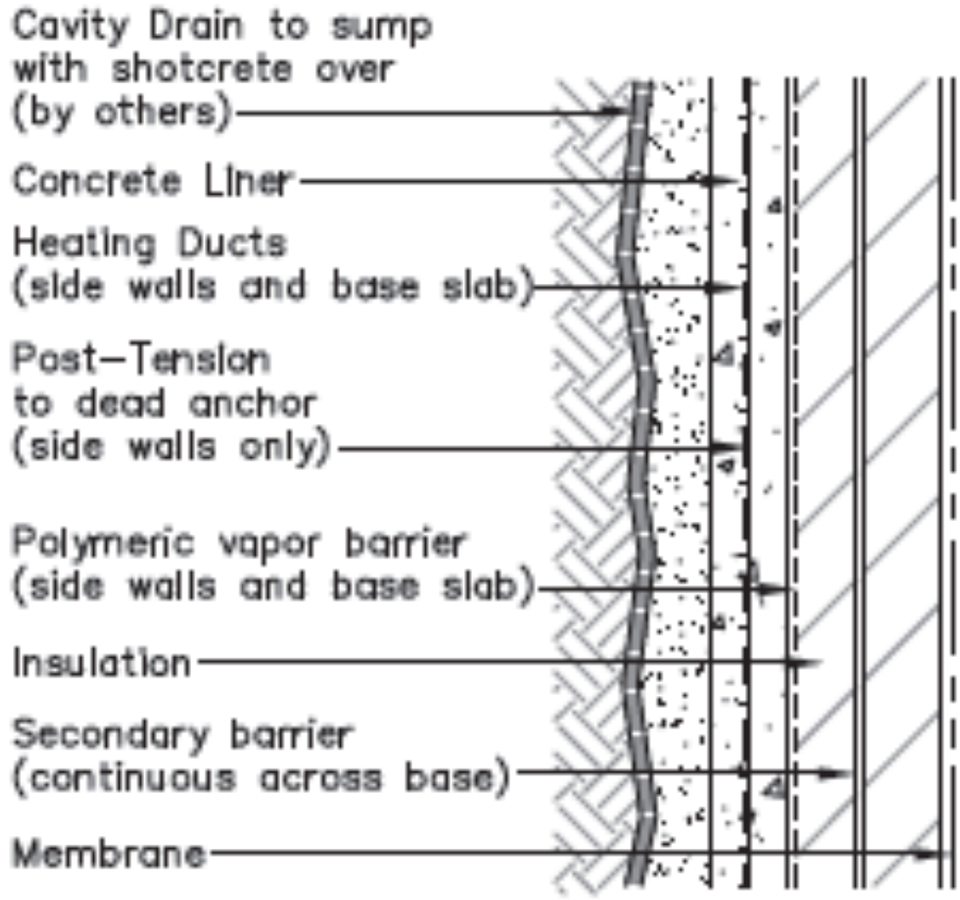

Detail 1