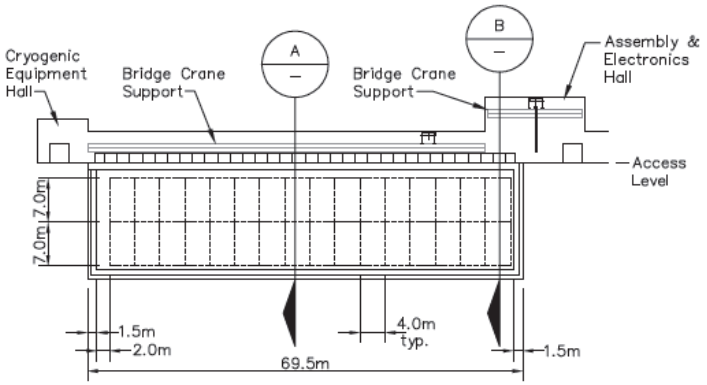

Long Section

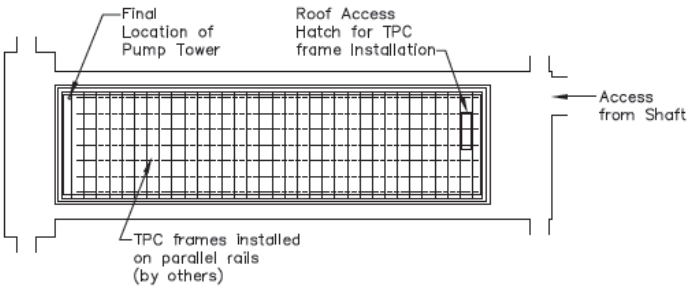

Plan

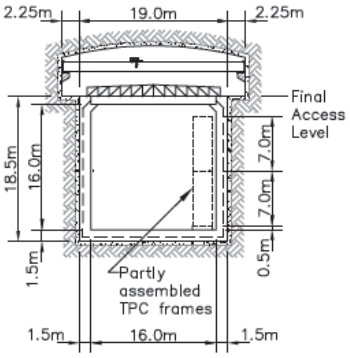

Section A

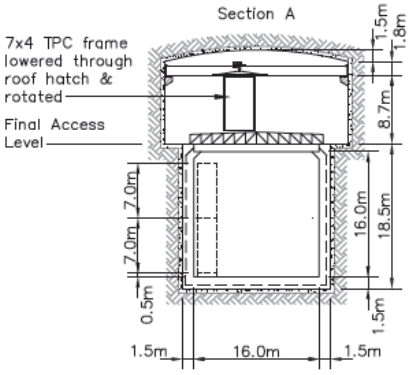

Section B