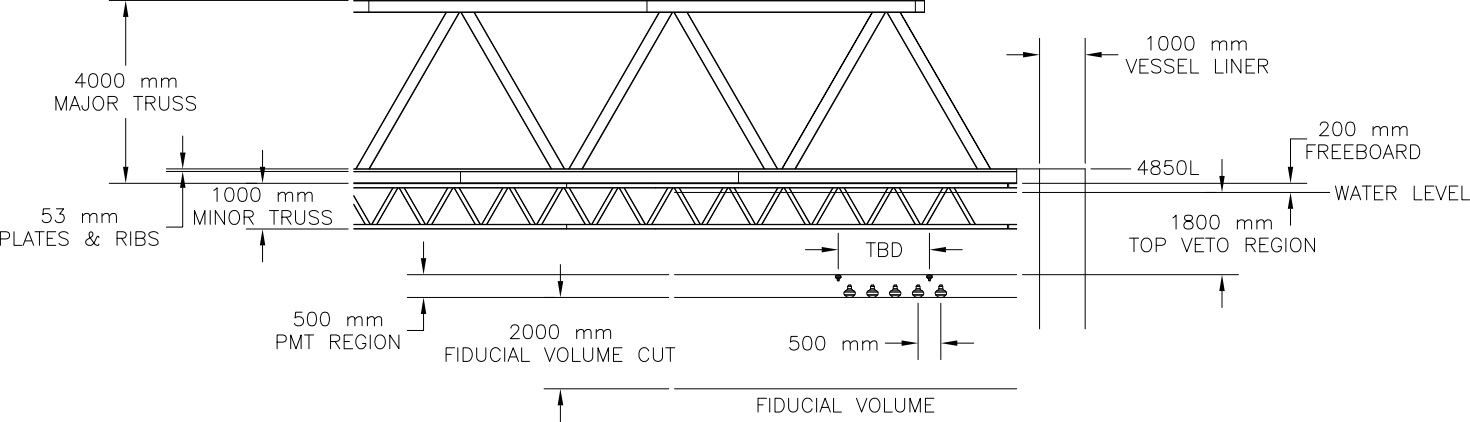
4000 mm
MAJOR TRUSS
1000 mm
VESSEL LINER
200 mm
FREEBOARD
4850L
WATER LEVEL
1000 mm
MINOR TRUSS
53 mm
PLATES & RIBS
1800 mm
TOP VETO REGION
TBD
500 mm
PMT REGION
2000 mm
FIDUCIAL VOLUME CUT
500 mm
FIDUCIAL VOLUME