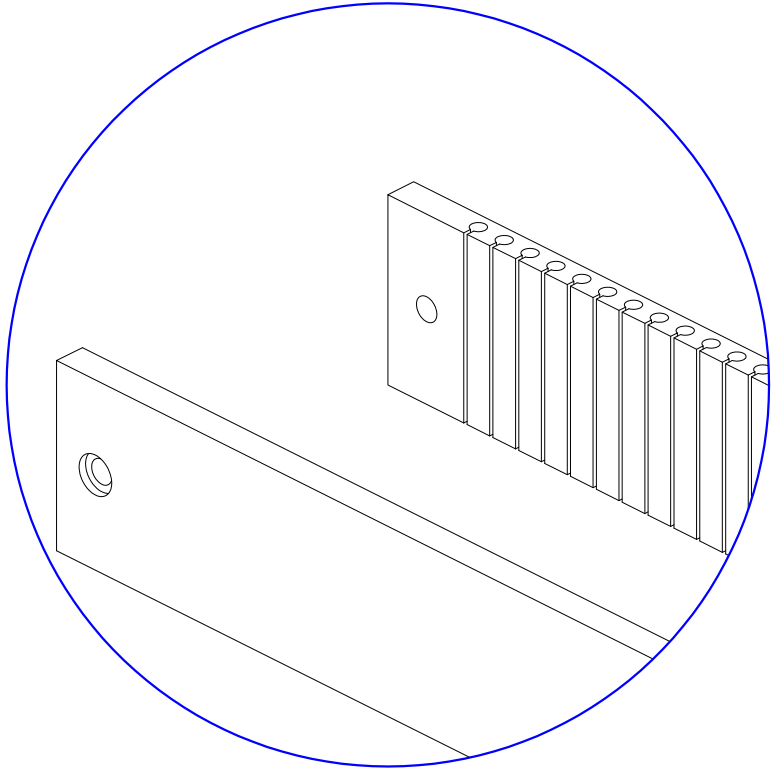

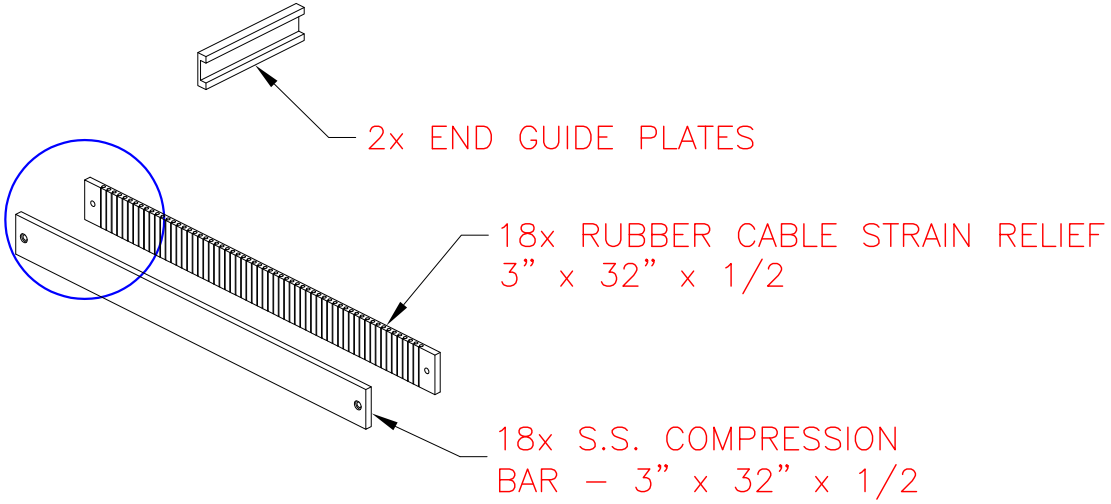
2x END GUIDE PLATES
18x RUBBER CABLE STRAIN RELIEF
3" x 32" x 1/2
18x S.S. COMPRESSION
BAR – 3" x 32" x 1/2