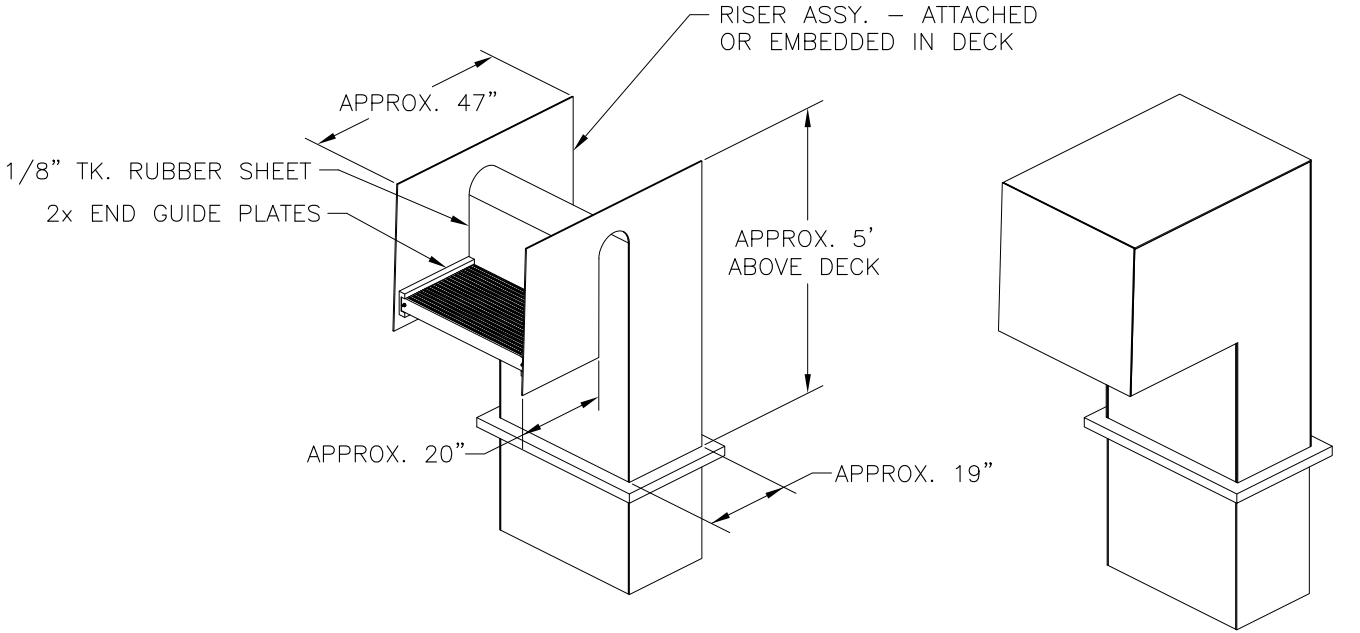
RISER ASSY. – ATTACHED
OR EMBEDDED IN DECK
APPROX. 47”
1/8” TK. RUBBER SHEET
2x END GUIDE PLATES
APPROX. 5’
ABOVE DECK
APPROX. 20”
APPROX. 19”
RISER ASSY. W/COVER