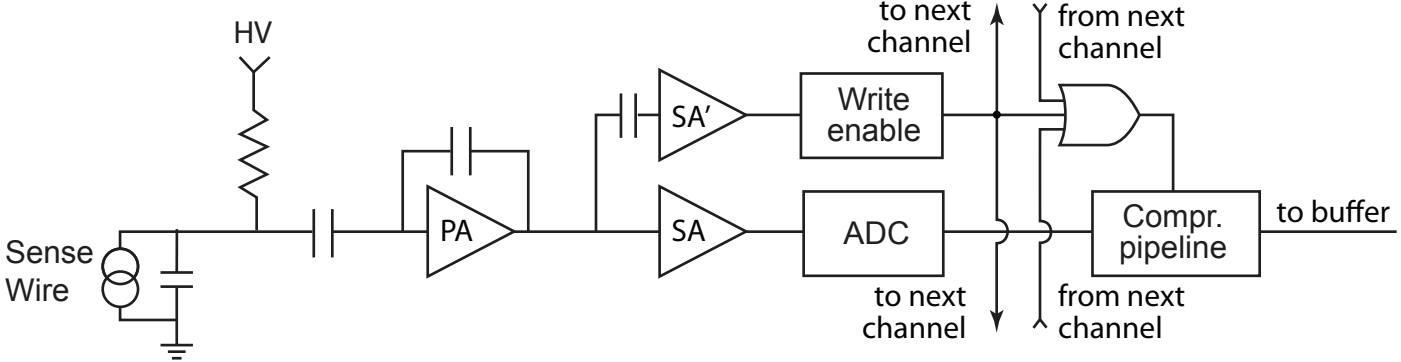
HV
Sense
Wire
PA
SA'
SA
Write
enable
ADC
to next
channel
to next
channel
from next
channel
from next
channel
Compr.
pipeline
to buffer