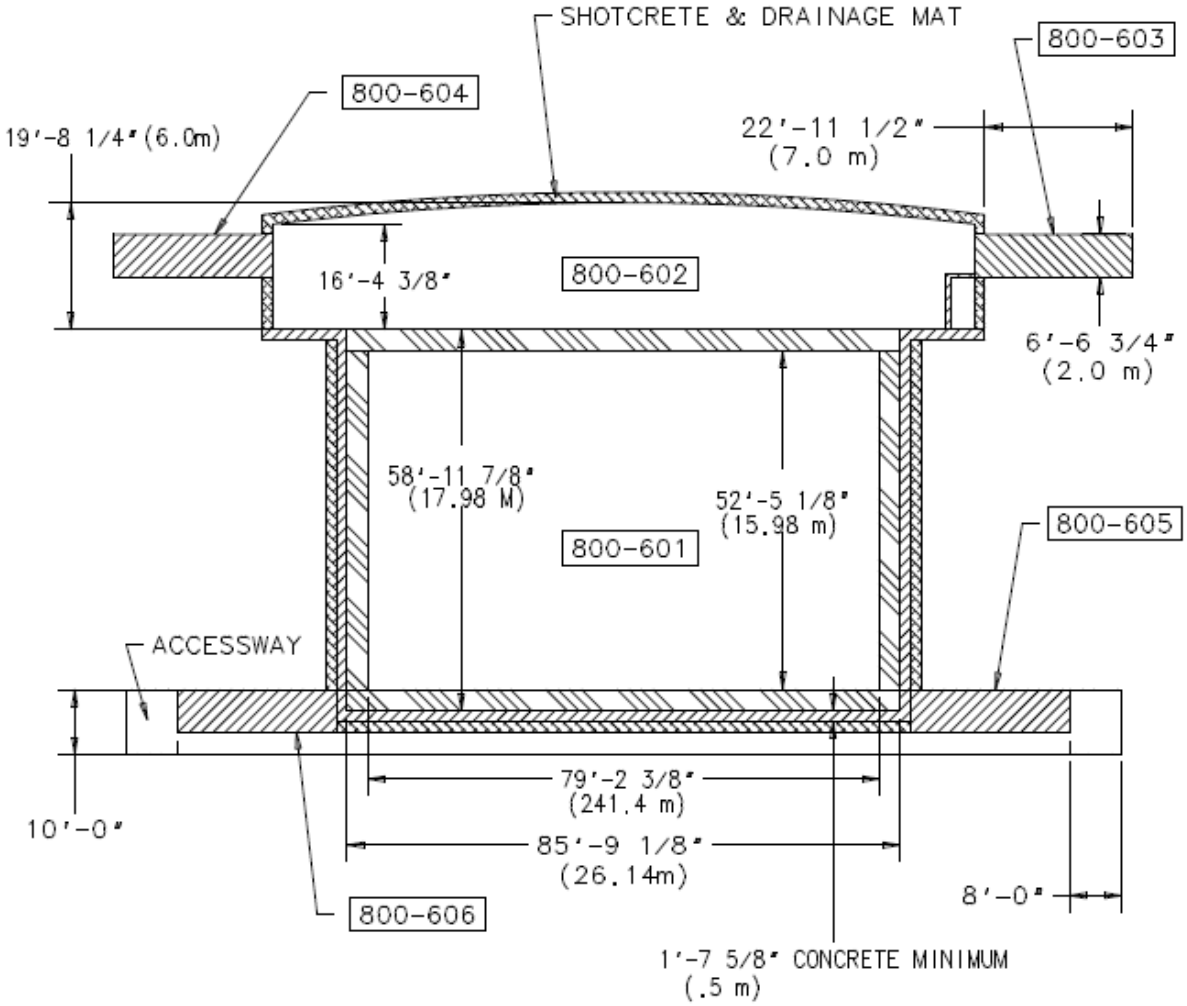
SHOTCRETE & DRAINAGE MAT
800-603
800-604
19'-8 1/4" (6.0m)
22'-11 1/2"
(7.0 m)
16'-4 3/8"
800-602
6'-6 3/4"
(2.0 m)
58'-11 7/8"
(17.98 M)
52'-5 1/8"
(15.98 m)
800-601
800-605
ACCESSWAY
79'-2 3/8"
(241.4 m)
10'-0"
85'-9 1/8"
(26.14m)
8'-0"
800-606
1'-7 5/8" CONCRETE MINIMUM
(.5 m)