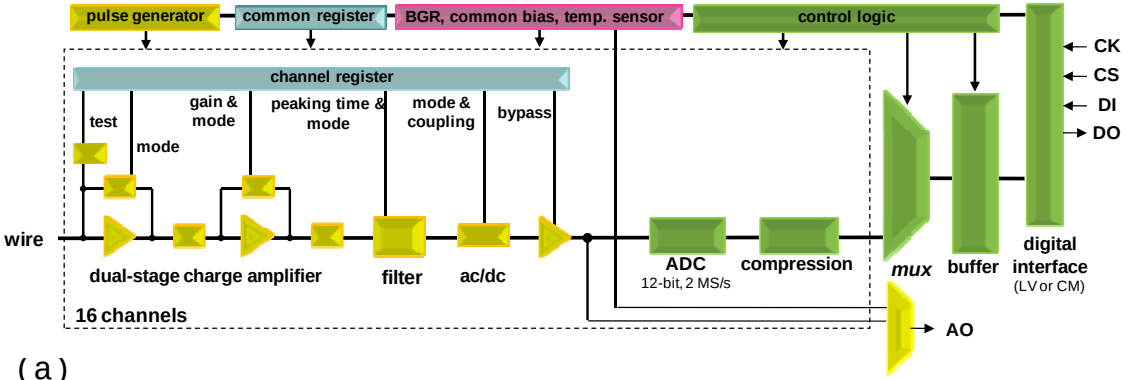
pulse generator
common register
BGR, common bias, temp. sensor
control logic
channel register
test
mode
gain & mode
peaking time & mode
mode & coupling
bypass
wire
dual-stage charge amplifier
filter
ac/dc
ADC
12-bit, 2 MS/s
compression
mux
buffer
digital interface
(LV or CM)
CK
CS
DI
DO
AO
16 channels

(a)

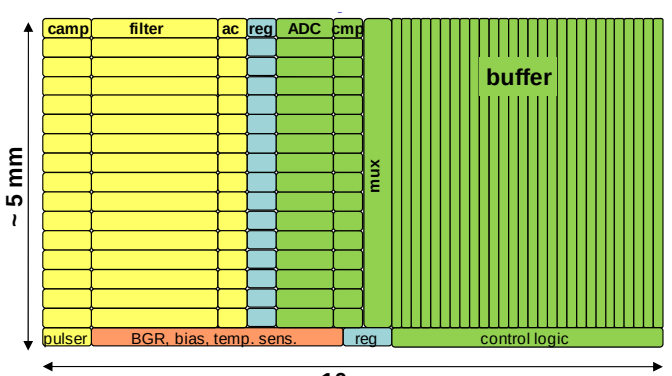
camp
filter
ac
reg
ADC
cmp
mux
buffer
~ 5 mm
pulser
BGR, bias, temp. sens.
reg
control logic
~ 10 mm

(b)