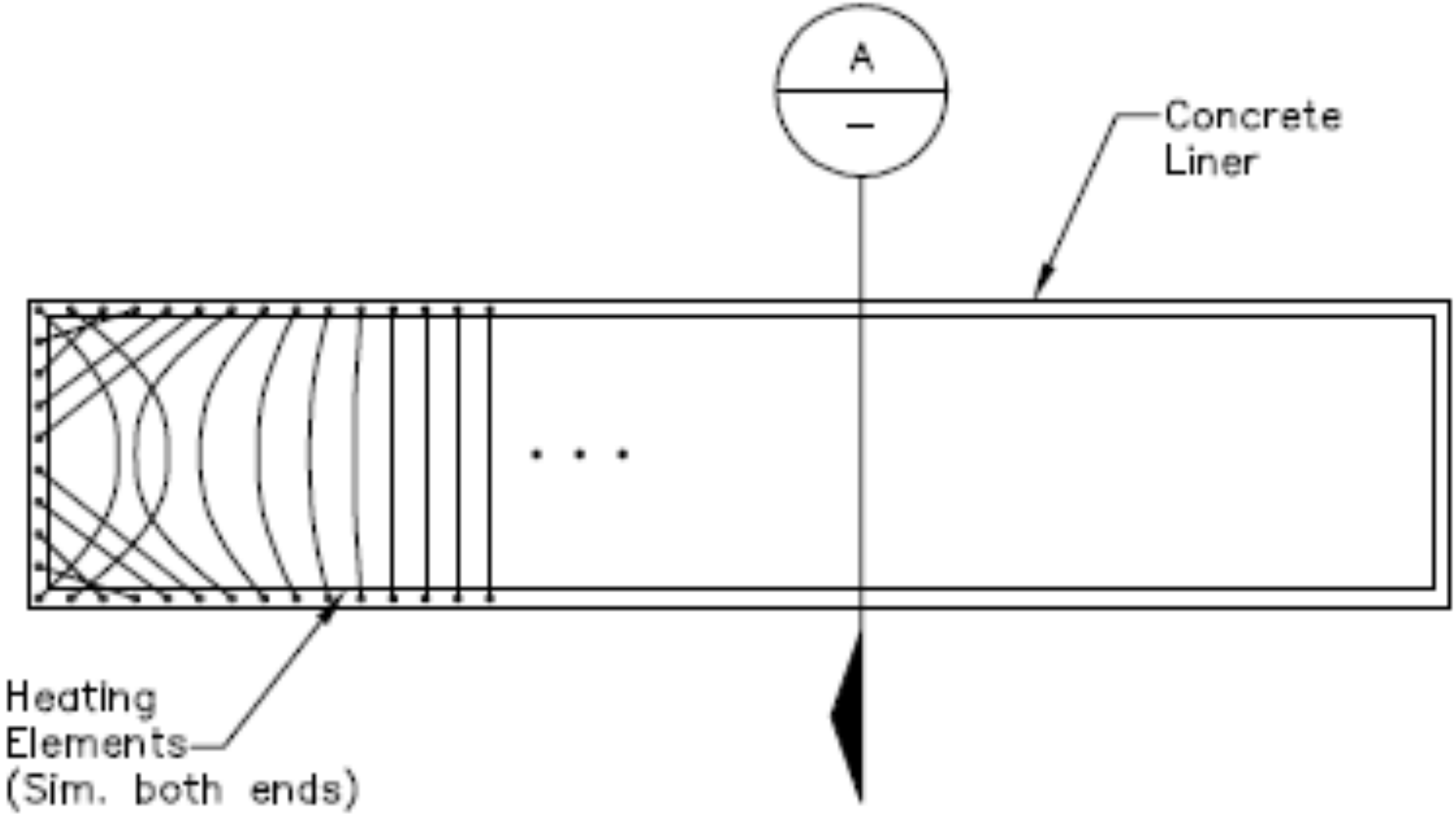

Plan