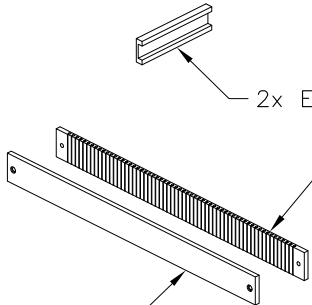RISER ASSY. W/COVER