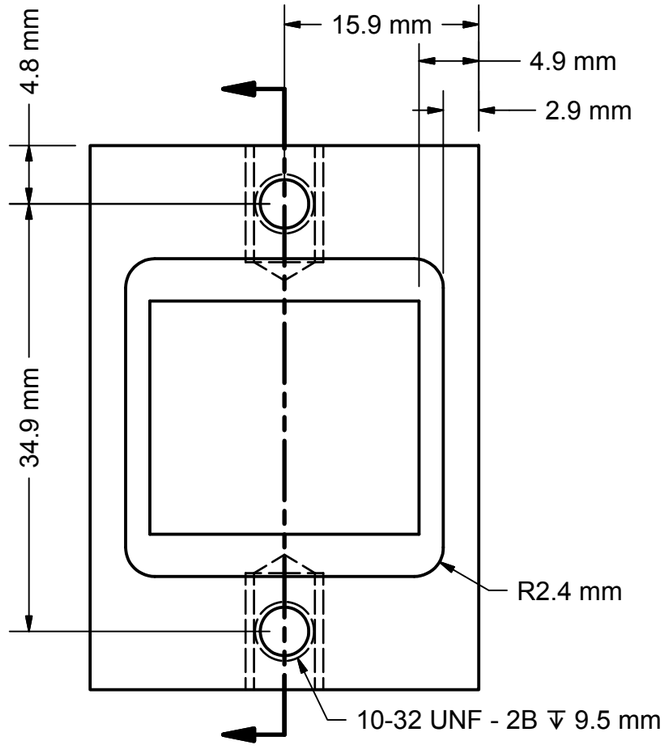

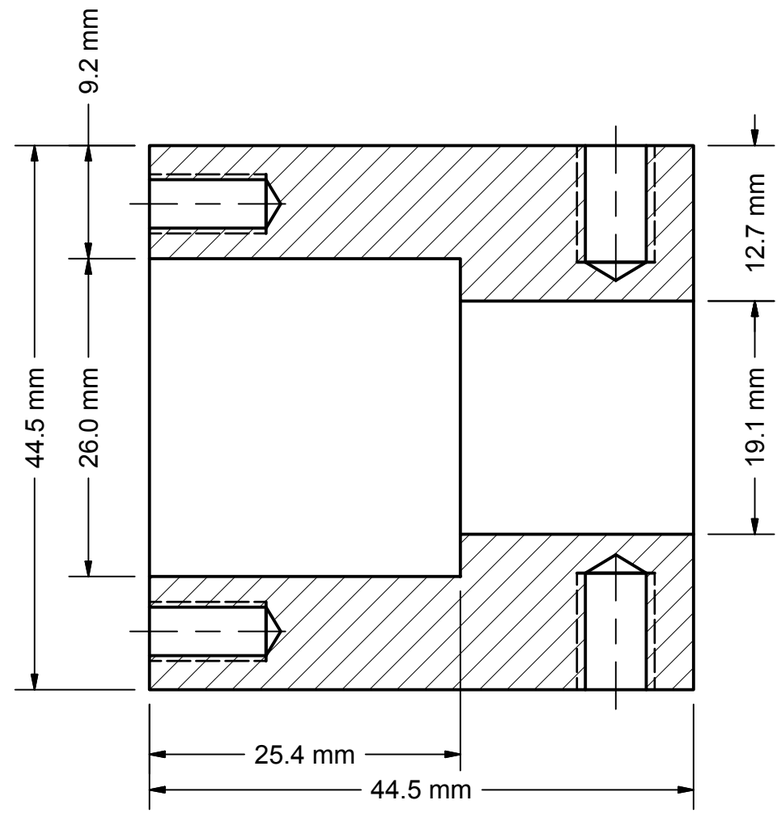

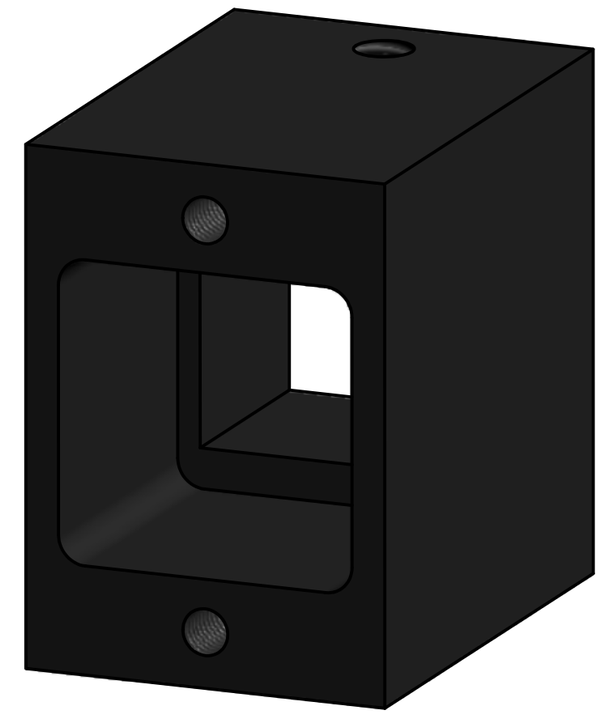

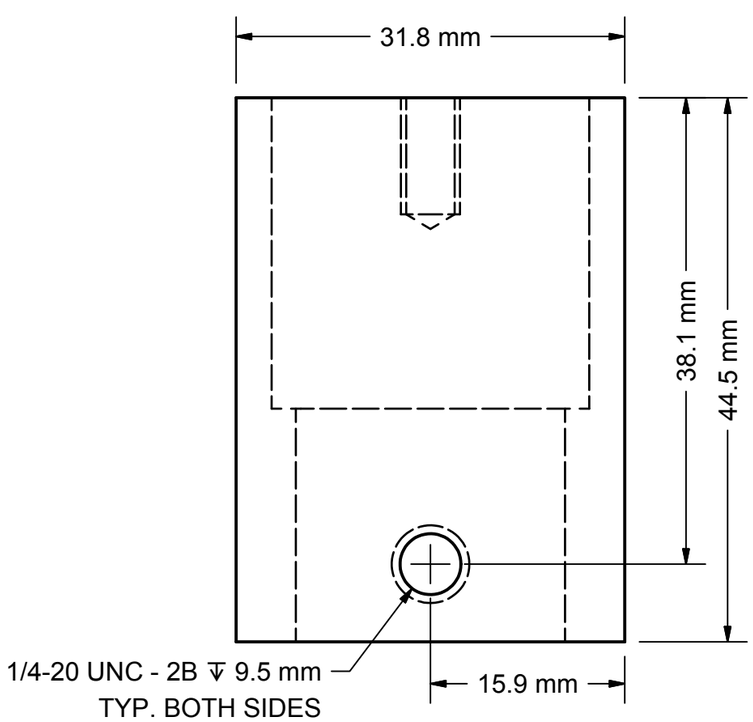

UNLESS OTHERWISE SPECIFIED			NAME	DATE
		DRAWN	foxw	10/25/2011
BREAK ALL EDGES .015 CHAMFER	UNITS in	CHECKED		
		APPROVED		

IUCEEM
INDIANA UNIVERSITY CENTER FOR EXPLORATION OF ENERGY & MATTER
2401 MILO B. SAMPSON LANE
BLOOMINGTON, IN 47408
(812) 855-9365 http://ceem.indiana.edu/

TOLERANCES:
DIMENSIONAL
.X ± .06
.XX ± .02
.XXX ± .005
.XXXX ± .001
ANGULAR ± ½°

TITLE
PMT BLOCK
LIGHT PANELS
LAr DUSEL

MATERIAL: Acrylic

DWG NO: 4010345 | REV

SHT. 1 OF 1 | SIZE: B