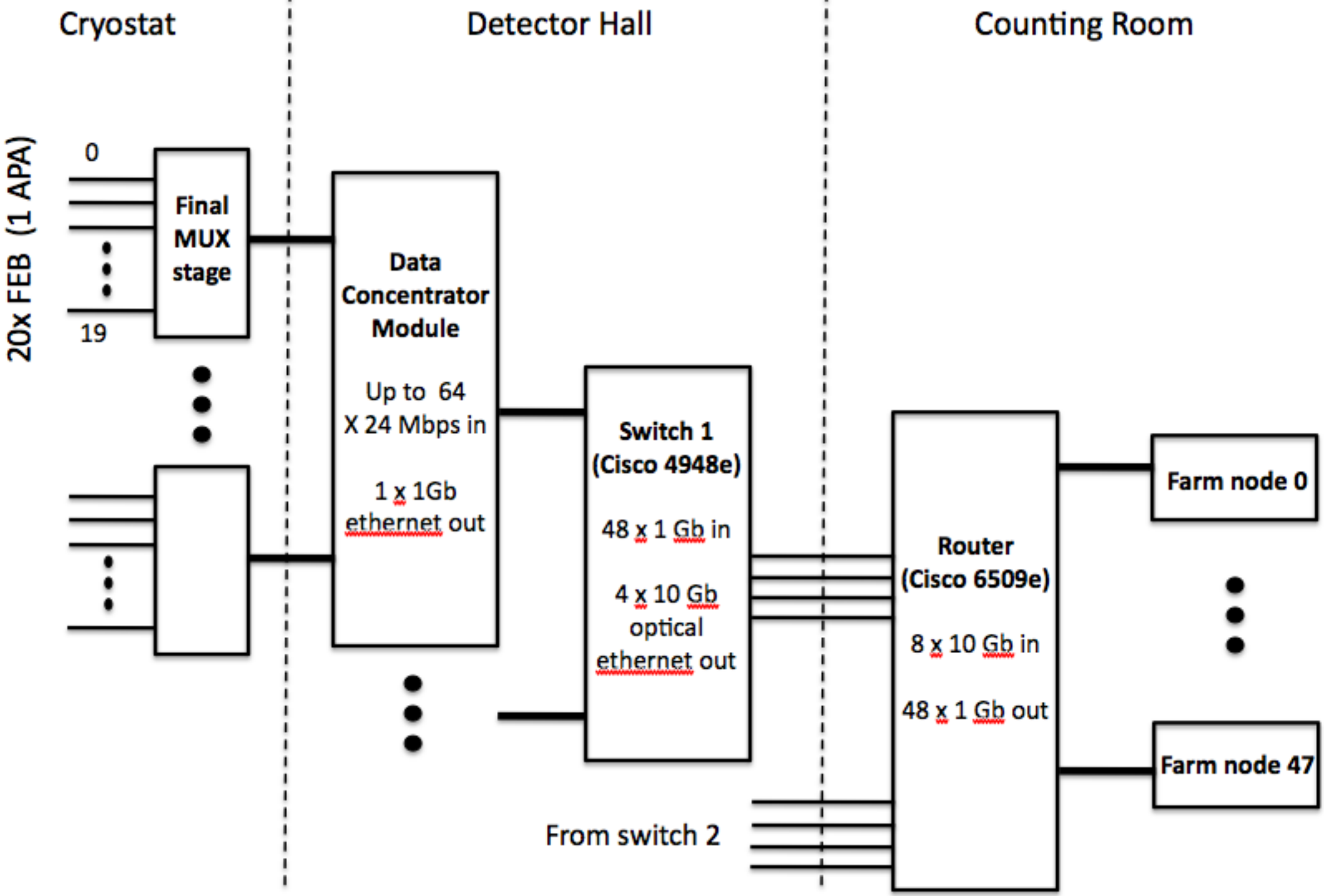
Cryostat
Detector Hall
Counting Room
20x FEB (1 APA)
0
19
Final MUX stage
Data Concentrator Module
Up to 64 X 24 Mbps in
1 x 1Gb ethernet out
Switch 1 (Cisco 4948e)
48 x 1 Gb in
4 x 10 Gb optical ethernet out
Router (Cisco 6509e)
8 x 10 Gb in
48 x 1 Gb out
Farm node 0
Farm node 47
From switch 2