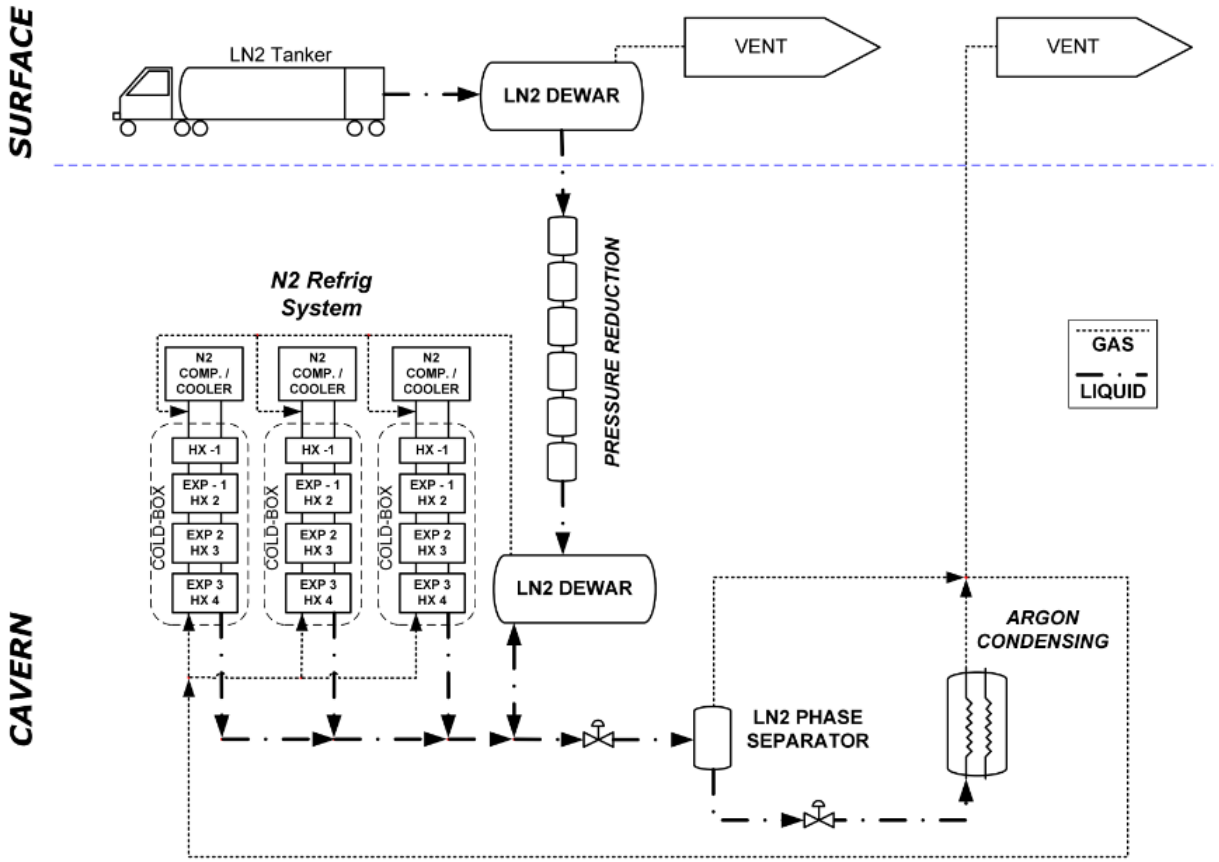
SURFACE
CAVERN
LN2 Tanker
LN2 DEWAR
VENT
VENT
PRESSURE REDUCTION
N2 Refrig System
N2 COMP. / COOLER
N2 COMP. / COOLER
N2 COMP. / COOLER
HX -1
EXP - 1 HX 2
EXP 2 HX 3
EXP 3 HX 4
COLD-BOX
COLD-BOX
COLD-BOX
LN2 DEWAR
GAS
LIQUID
ARGON CONDENSING
LN2 PHASE SEPARATOR