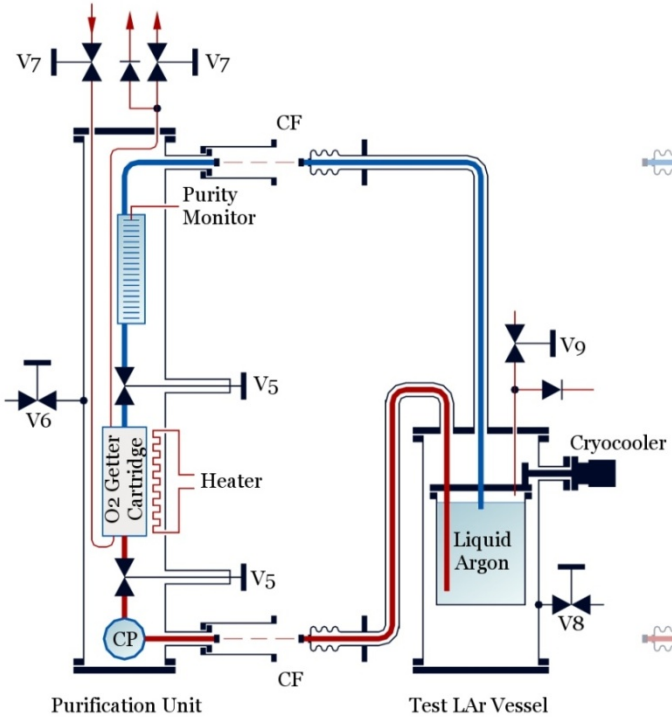
V7
V7
CF
Purity
Monitor
V9
V5
V6
Cryocooler
O2 Getter
Cartridge
Heater
Liquid
Argon
V5
V8
CP
CF
Purification Unit
Test LAr Vessel