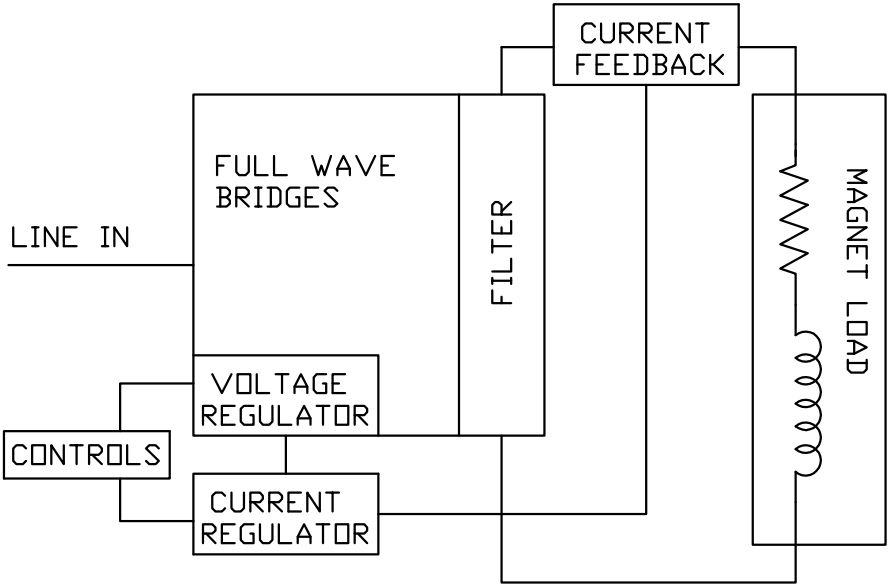
CURRENT FEEDBACK
FULL WAVE BRIDGES
FILTER
MAGNET LOAD
LINE IN
VOLTAGE REGULATOR
CONTROLS
CURRENT REGULATOR