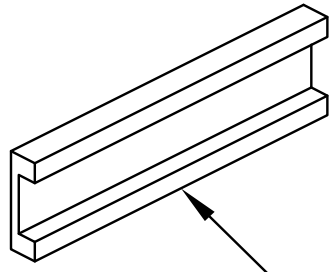

2x END GUIDE PLATES

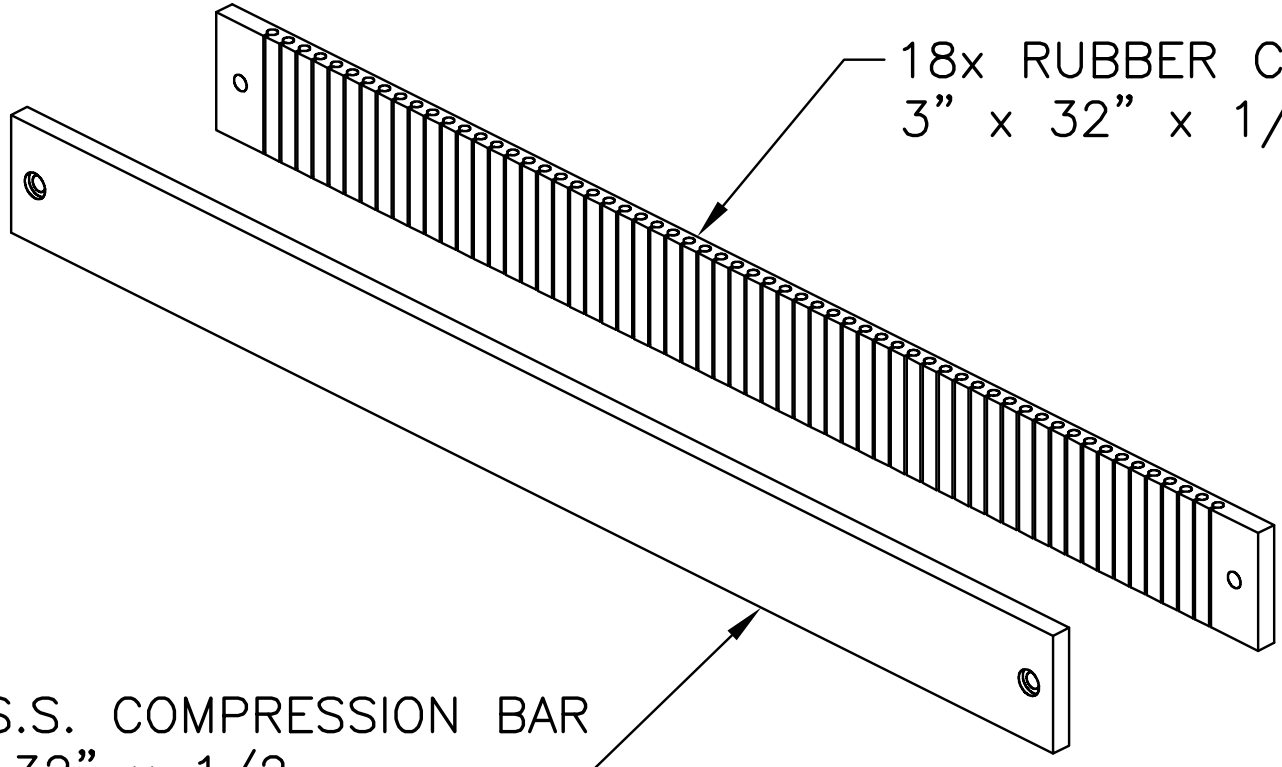

18x RUBBER CABLE STRAIN RELIEF
3" x 32" x 1/2

18x S.S. COMPRESSION BAR
3" x 32" x 1/2