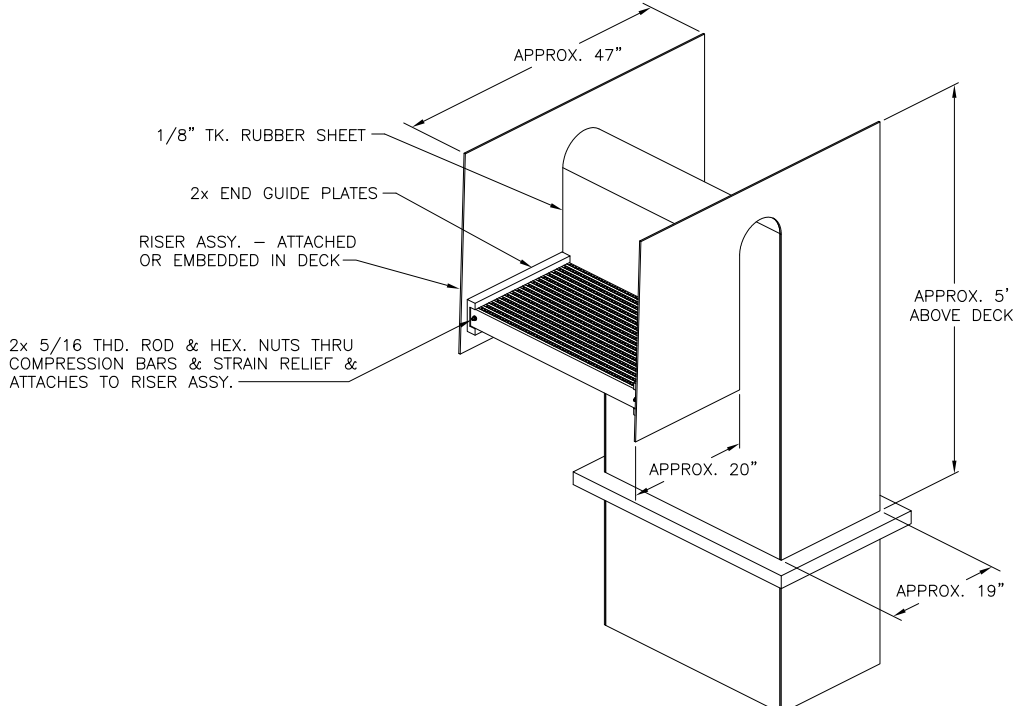
APPROX. 47"
1/8" TK. RUBBER SHEET
2x END GUIDE PLATES
RISER ASSY. – ATTACHED
OR EMBEDDED IN DECK
2x 5/16 THD. ROD & HEX. NUTS THRU
COMPRESSION BARS & STRAIN RELIEF &
ATTACHES TO RISER ASSY.
APPROX. 5'
ABOVE DECK
APPROX. 20"
APPROX. 19"