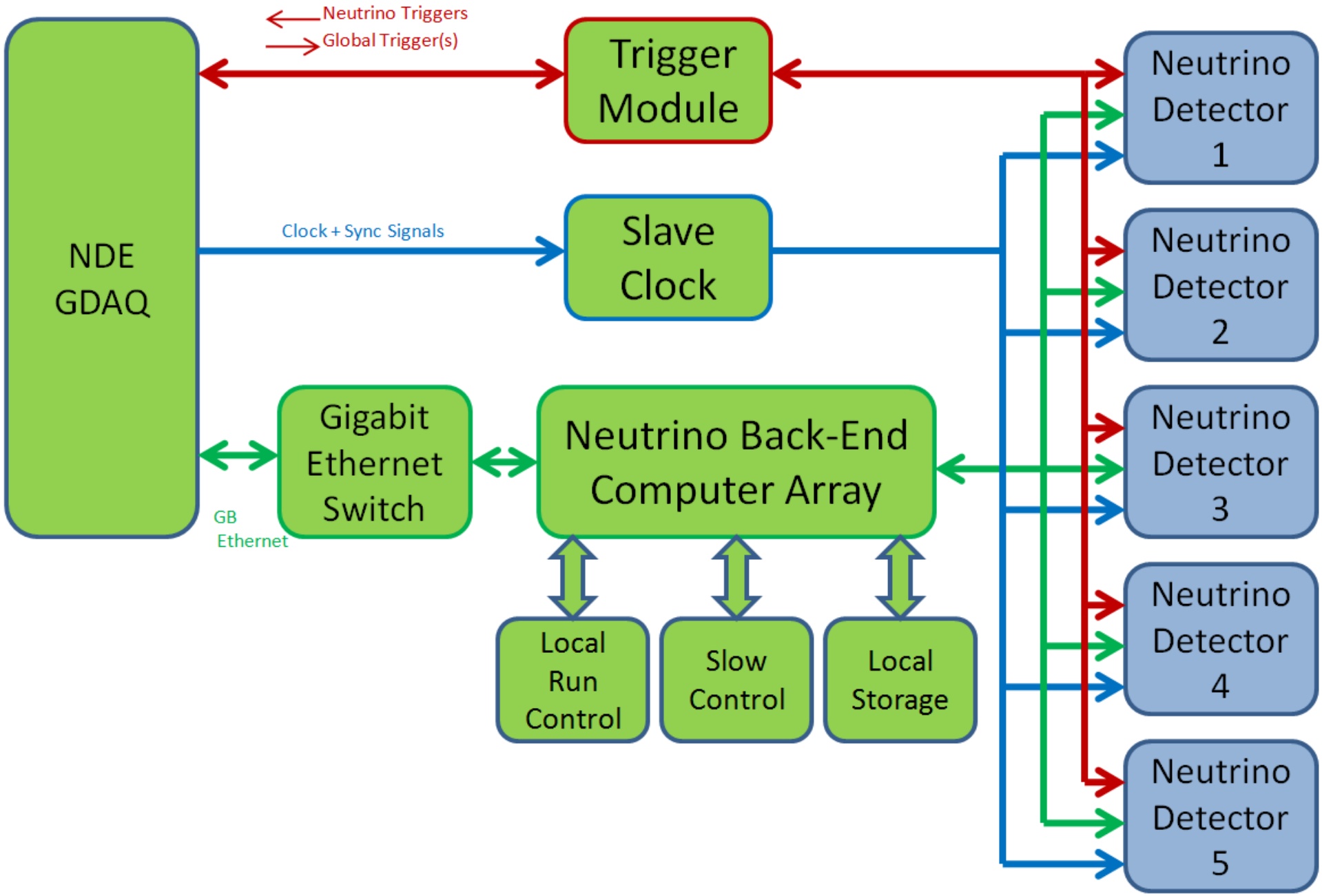
Neutrino Triggers
Global Trigger(s)
Trigger Module
NDE GDAQ
Clock + Sync Signals
Slave Clock
Gigabit Ethernet Switch
GB Ethernet
Neutrino Back-End Computer Array
Local Run Control
Slow Control
Local Storage
Neutrino Detector 1
Neutrino Detector 2
Neutrino Detector 3
Neutrino Detector 4
Neutrino Detector 5