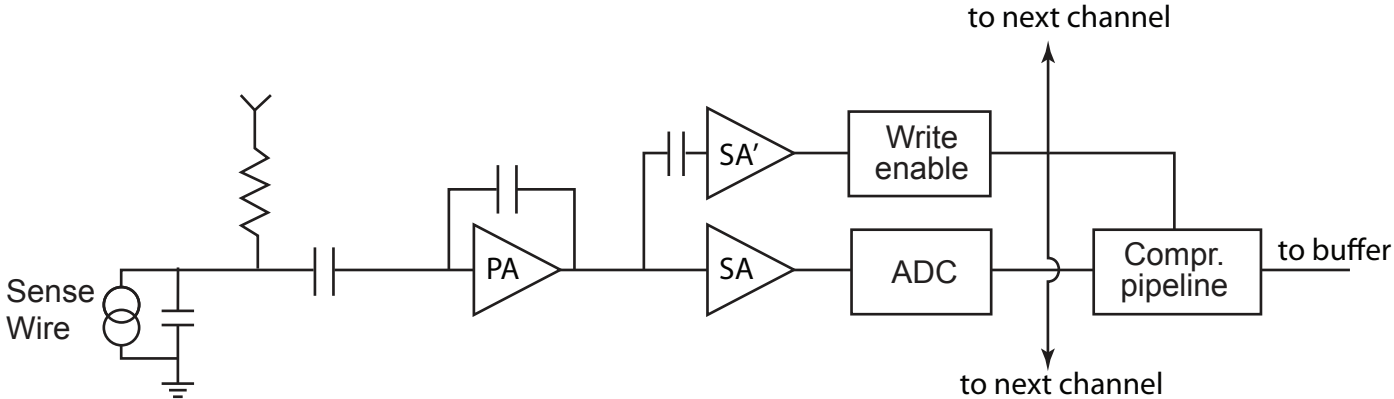
to next channel
Write
enable
SA′
PA
SA
ADC
Compr.
pipeline
to buffer
Sense
Wire
to next channel