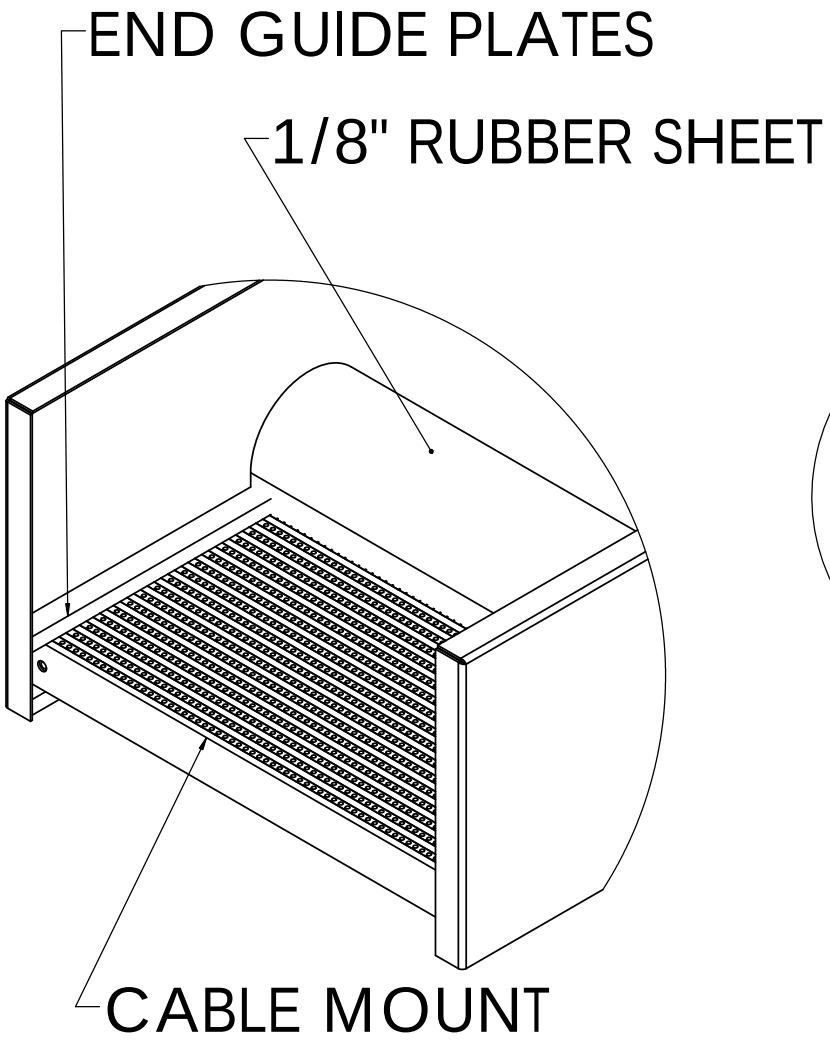
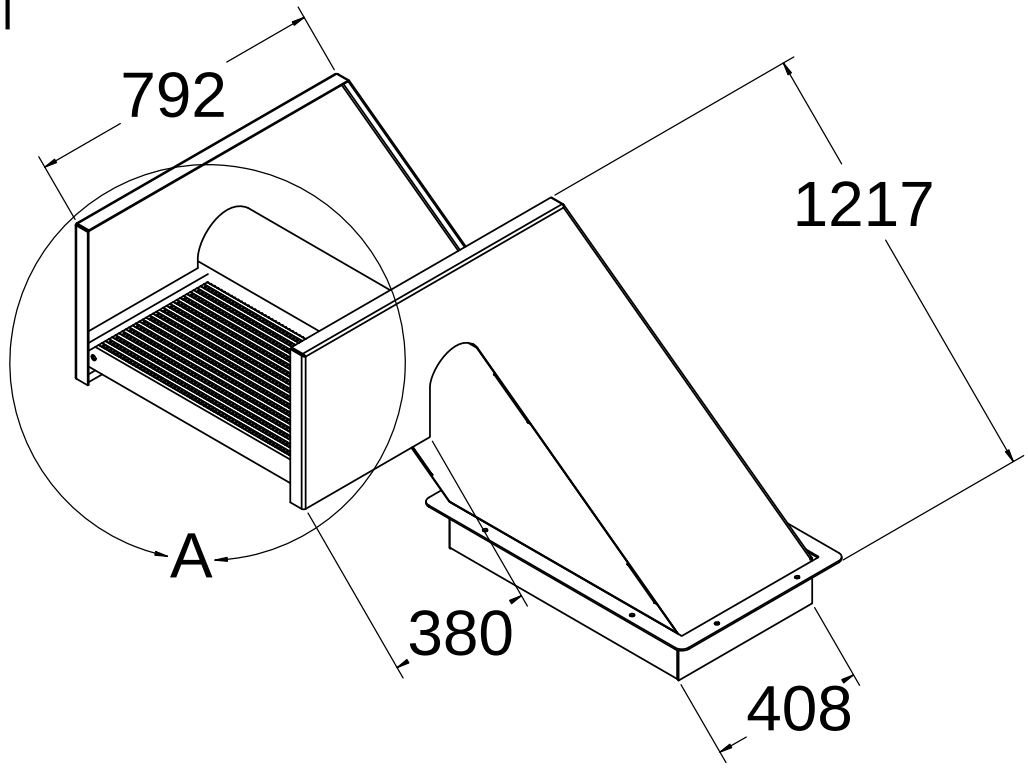
DETAIL A
SCALE 1 : 5