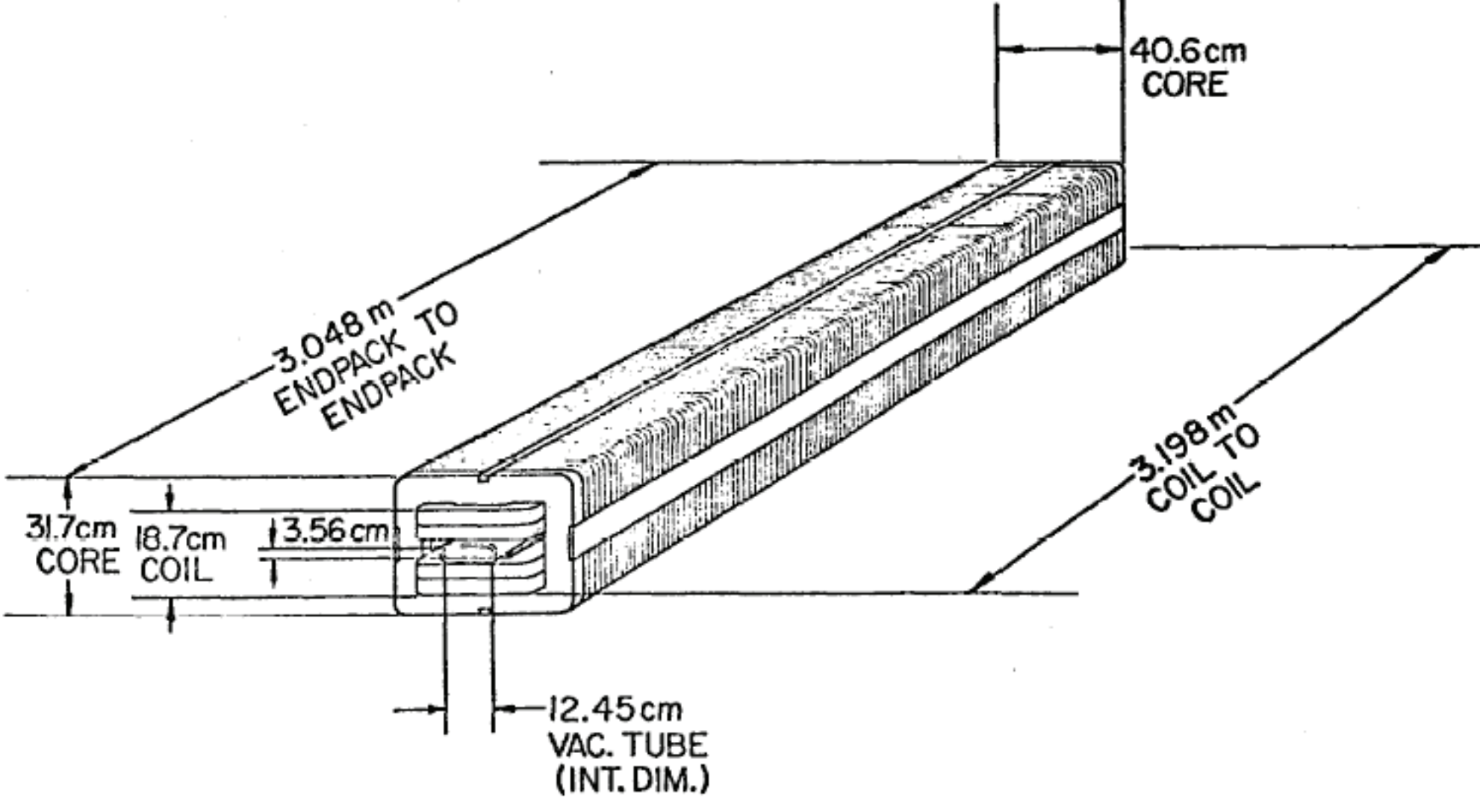
40.6 cm
CORE
3.048 m
ENDPACK TO
ENDPACK
3.198 m
COIL TO
COIL
31.7cm
CORE
18.7cm
COIL
3.56 cm
12.45 cm
VAC. TUBE
(INT. DIM.)