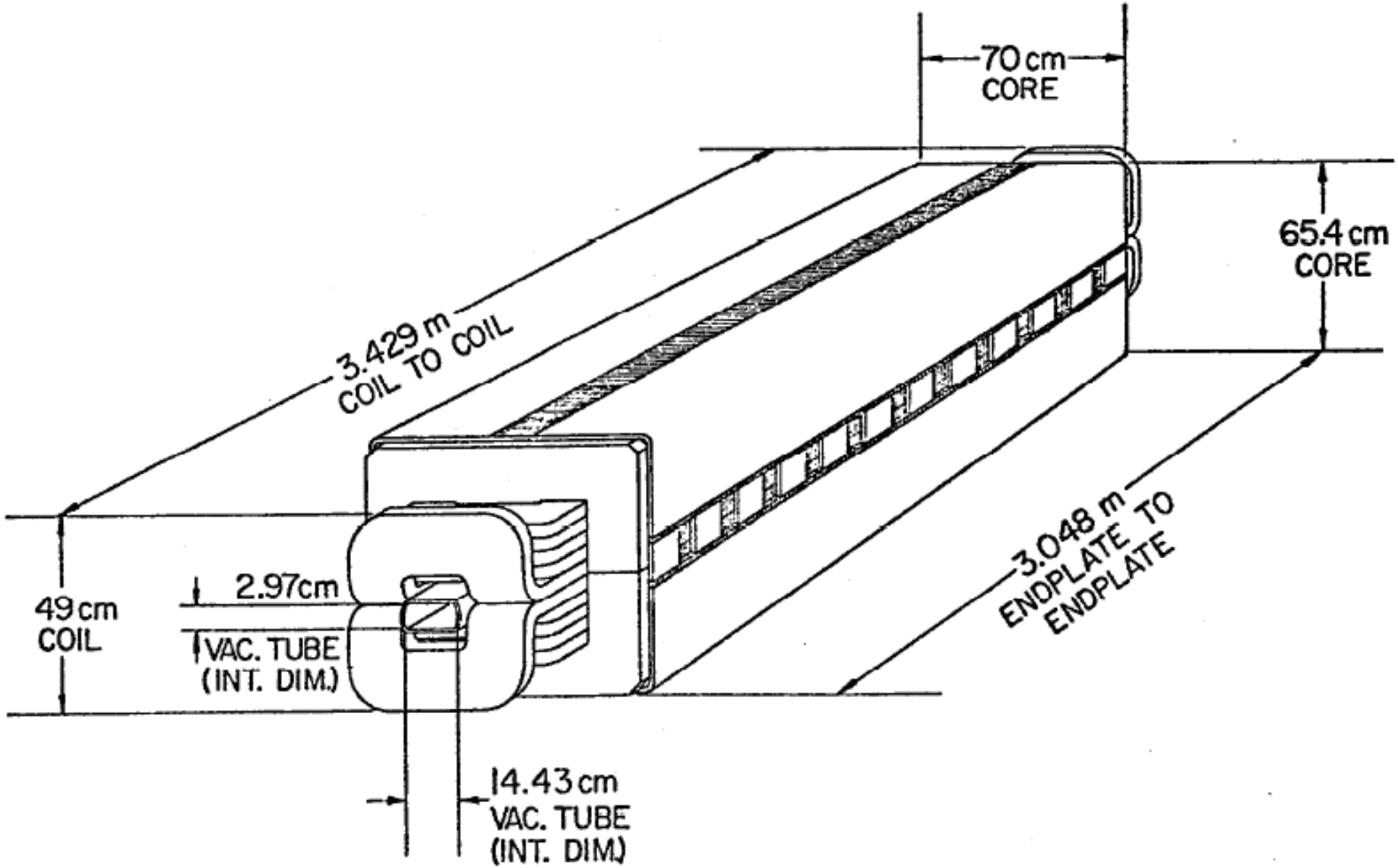
70 cm
CORE
65.4 cm
CORE
3.429 m
COIL TO COIL
3.048 m
ENDPLATE TO
ENDPLATE
49 cm
COIL
2.97cm
VAC. TUBE
(INT. DIM.)
14.43 cm
VAC. TUBE
(INT. DIM.)