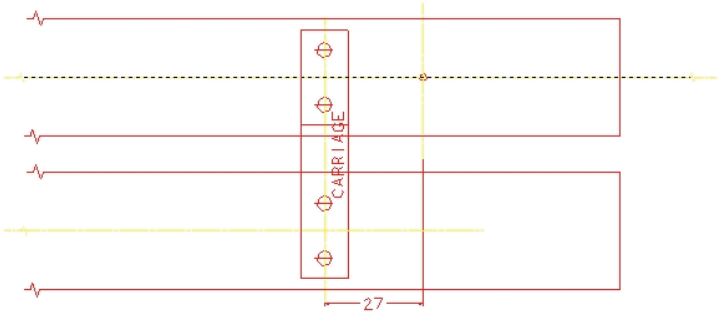

AISLE SIDE

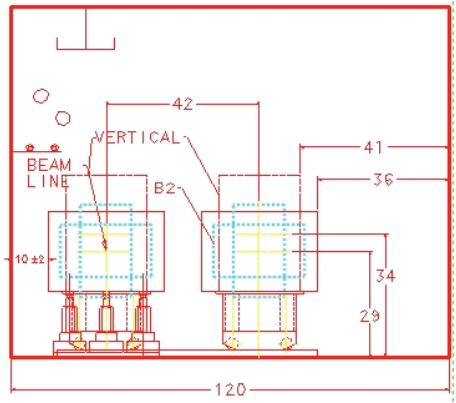

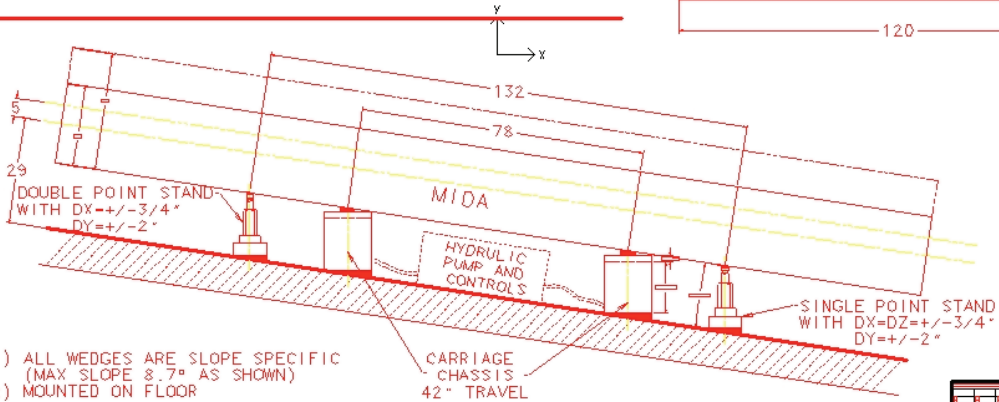

1) ALL WEDGES ARE SLOPE SPECIFIC (MAX SLOPE 8.7° AS SHOWN)
2) MOUNTED ON FLOOR

SIDE VIEW