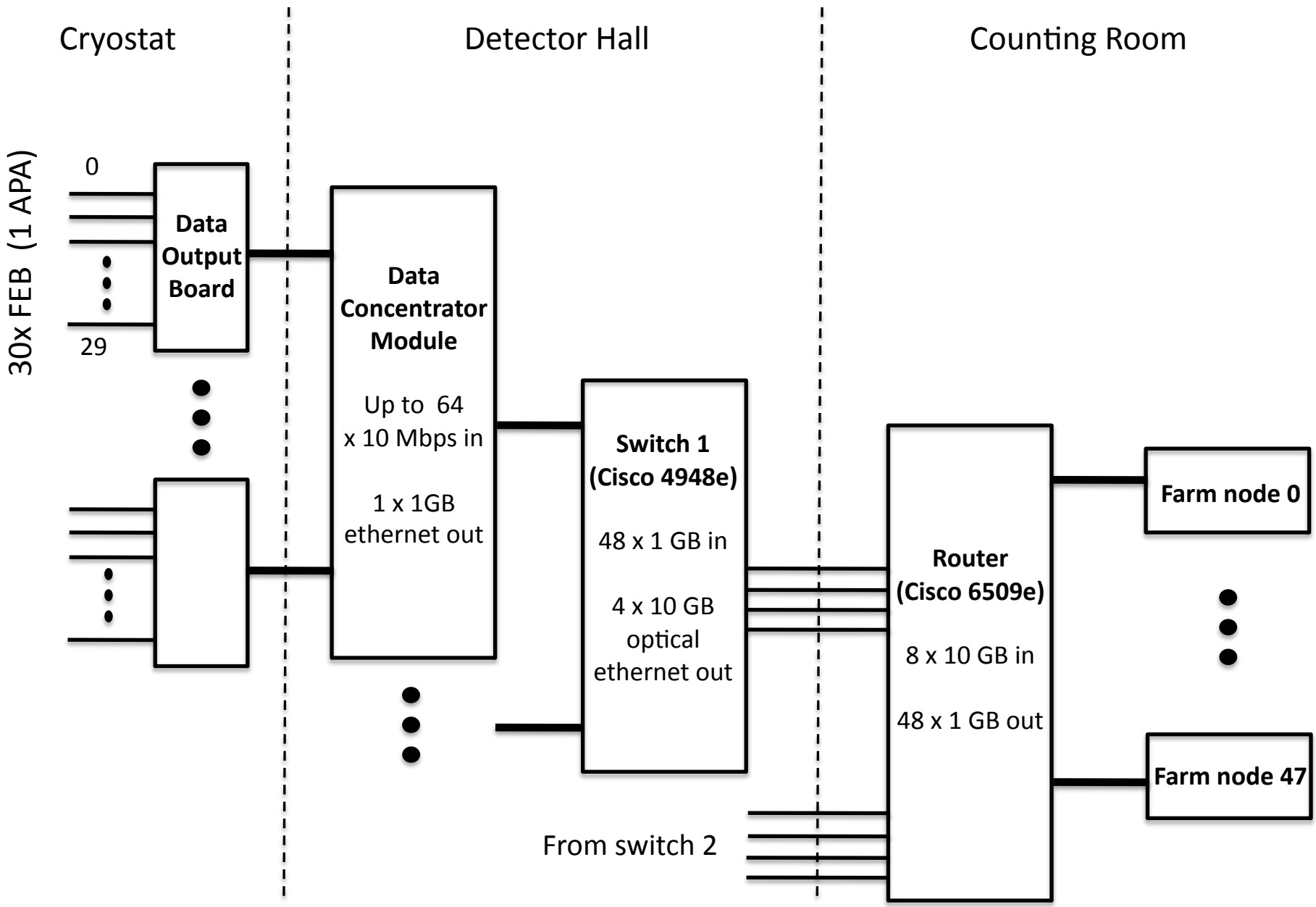
Cryostat
Detector Hall
Counting Room
30x FEB (1 APA)
0
29
Data Output Board
Data Concentrator Module
Up to 64 x 10 Mbps in
1 x 1GB ethernet out
Switch 1 (Cisco 4948e)
48 x 1 GB in
4 x 10 GB optical ethernet out
Router (Cisco 6509e)
8 x 10 GB in
48 x 1 GB out
Farm node 0
Farm node 47
From switch 2