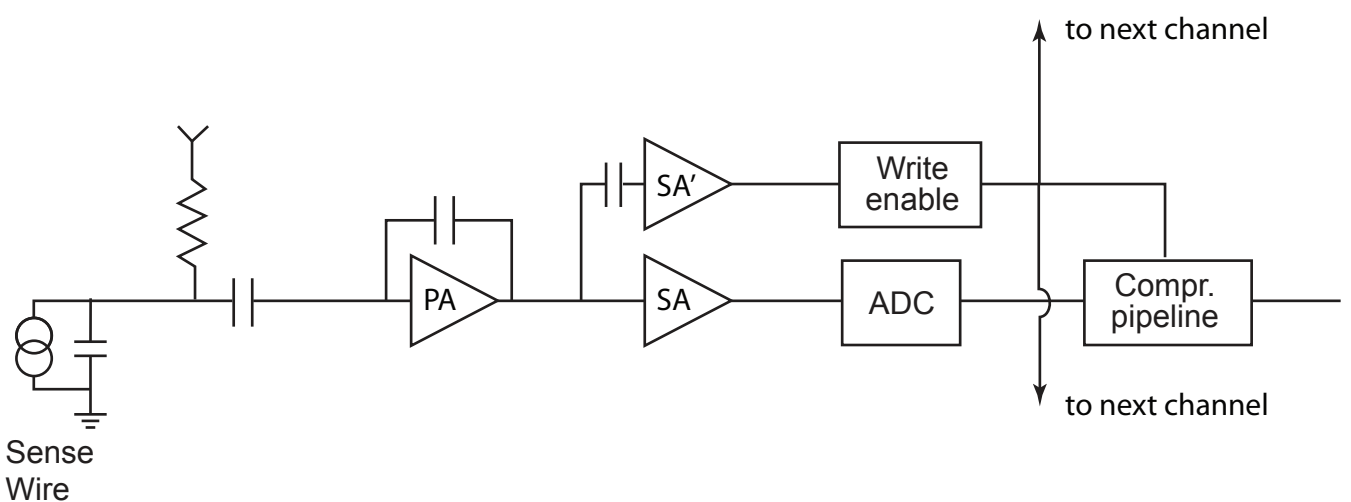
to next channel
SA'
Write
enable
PA
SA
ADC
Compr.
pipeline
to next channel
Sense
Wire