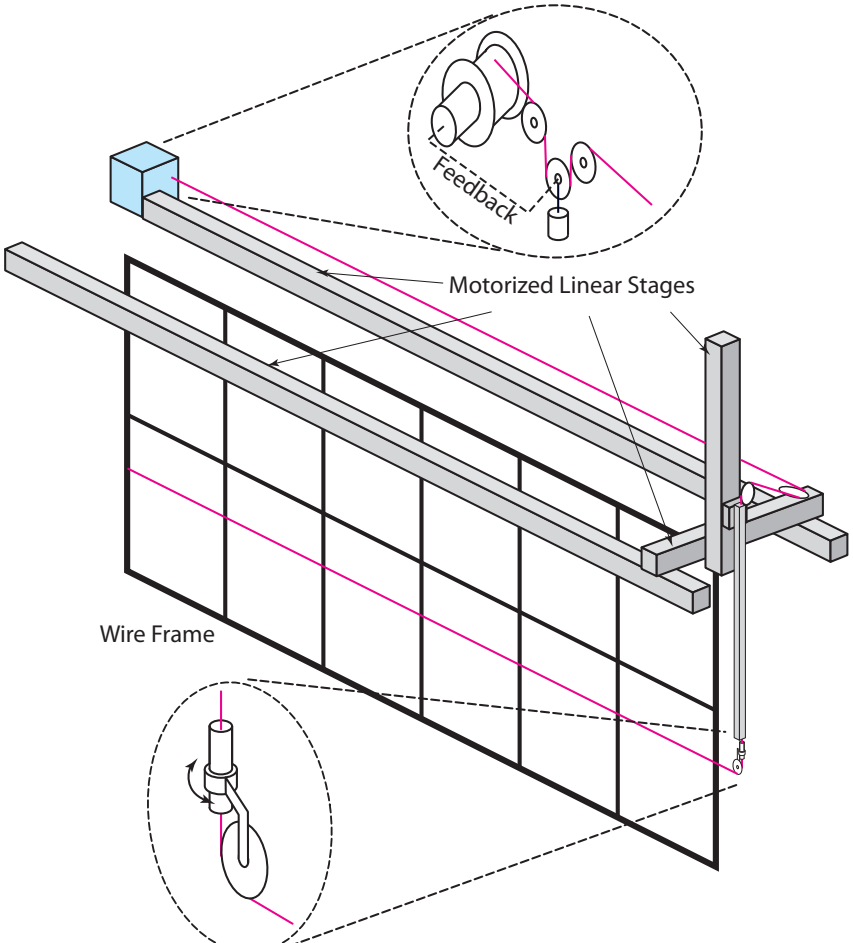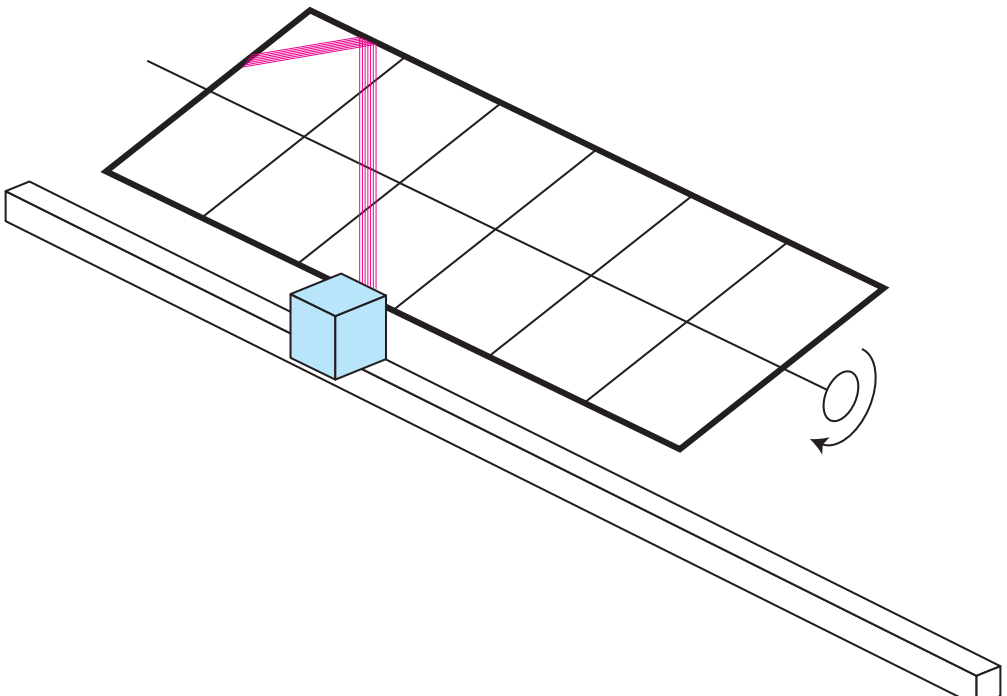
Feedback
Motorized Linear Stages
Wire Frame