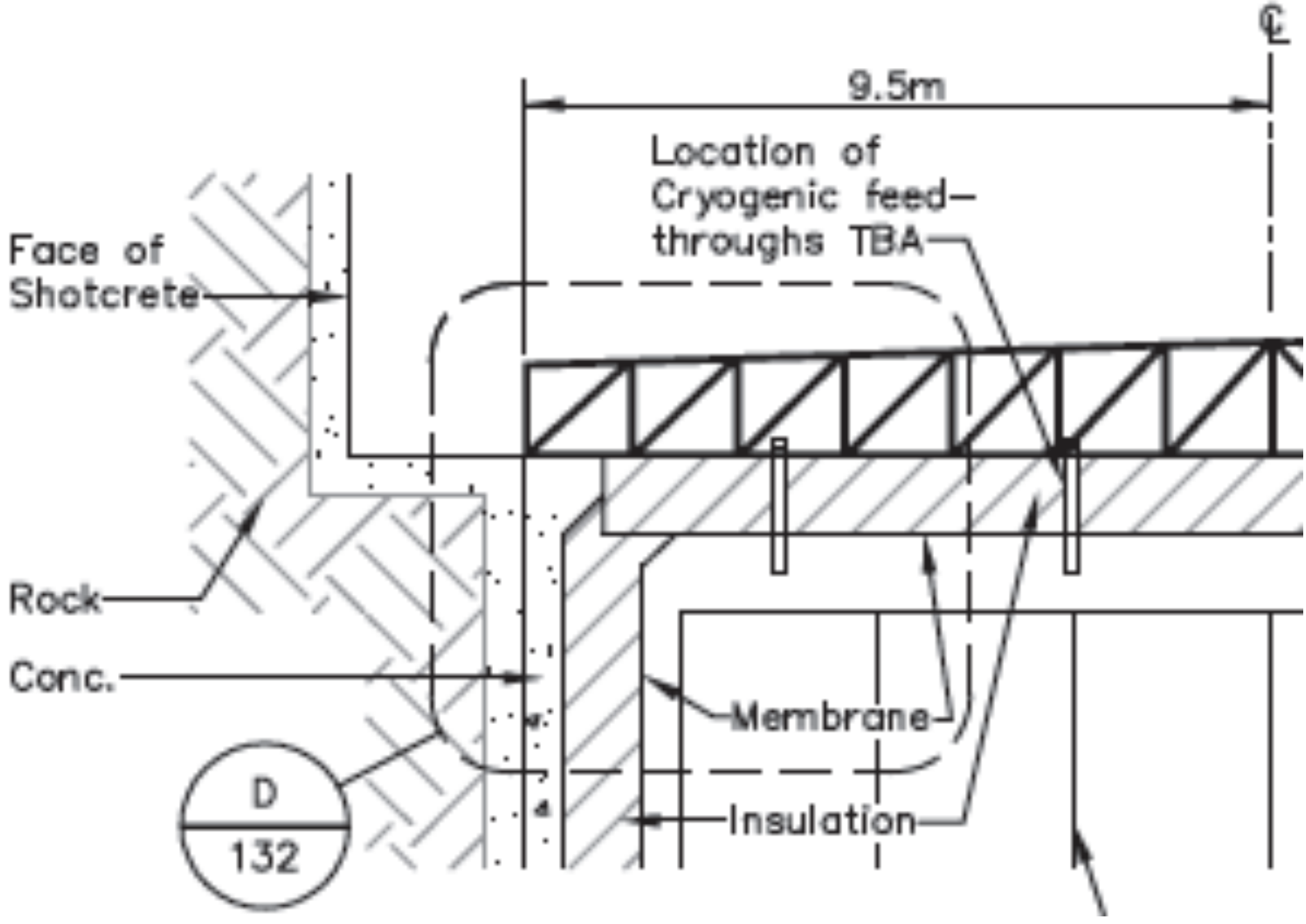
℄
9.5m
Location of
Cryogenic feed-
throughs TBA
Face of
Shotcrete
Rock
Conc.
Membrane
Insulation
D
132