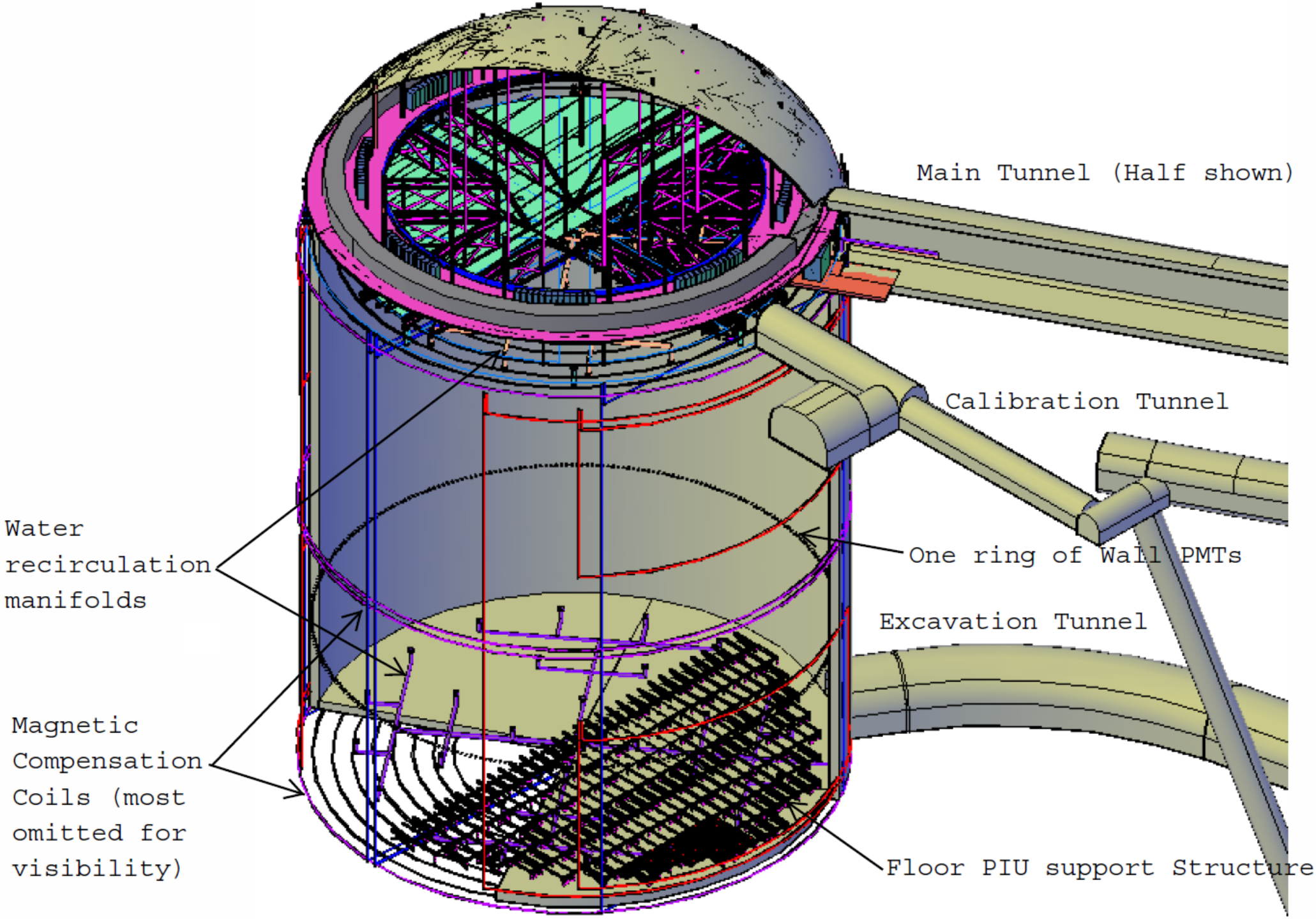
Main Tunnel (Half shown)
Calibration Tunnel
Water recirculation manifolds
One ring of Wall PMTs
Excavation Tunnel
Magnetic Compensation Coils (most omitted for visibility)
Floor PIU support Structure