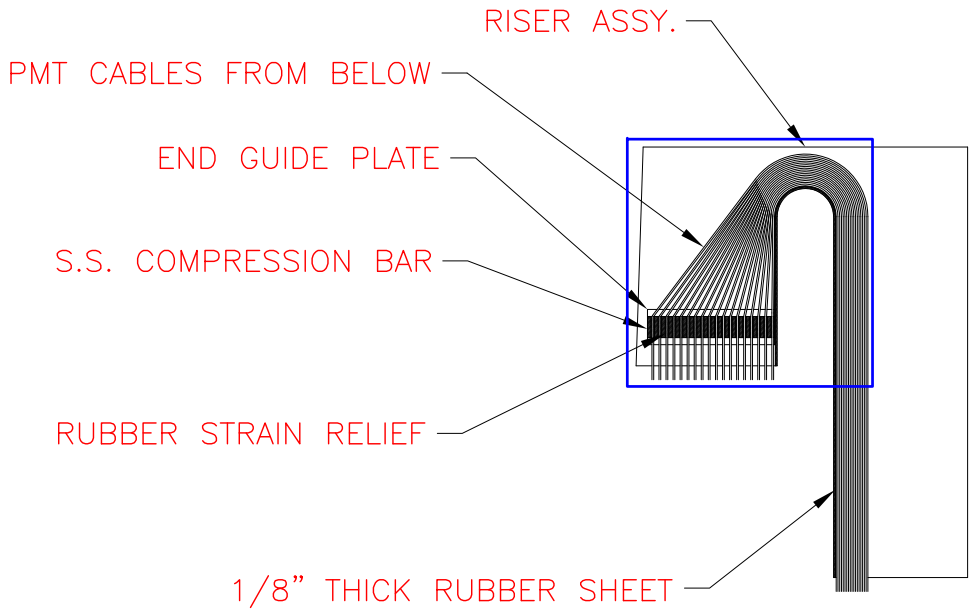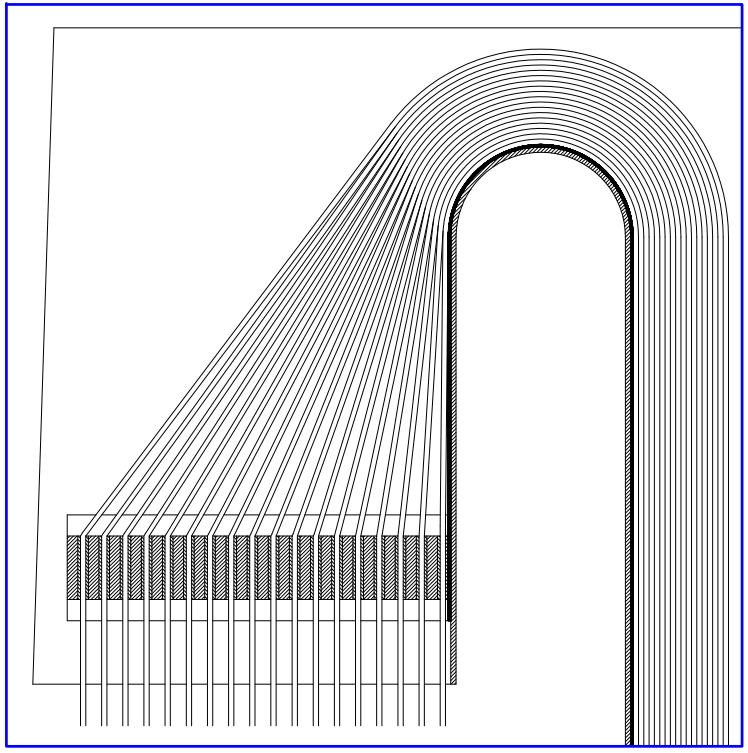
RISER ASSY.
PMT CABLES FROM BELOW
END GUIDE PLATE
S.S. COMPRESSION BAR
RUBBER STRAIN RELIEF
1/8" THICK RUBBER SHEET