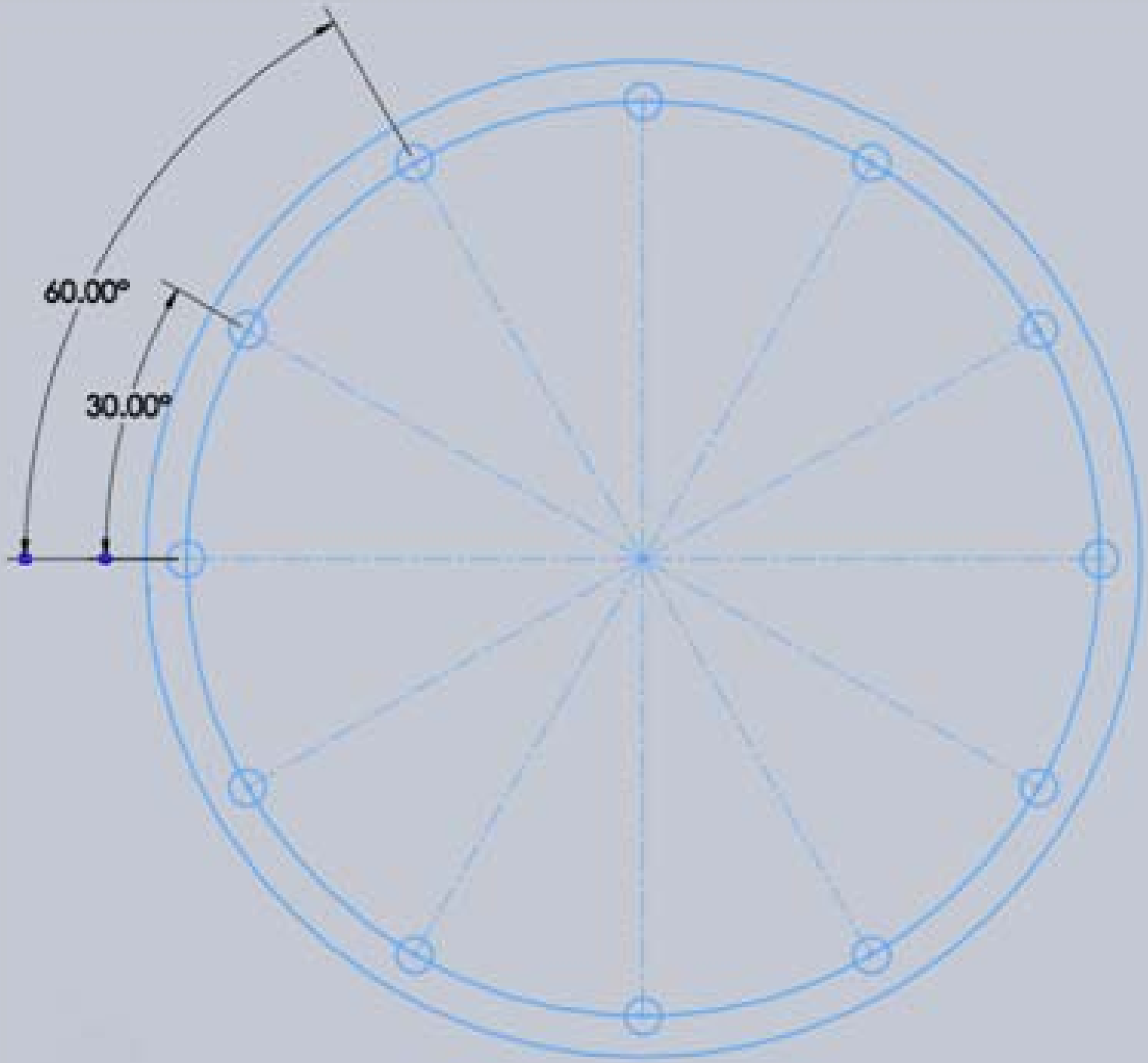
60.00°
30.00°