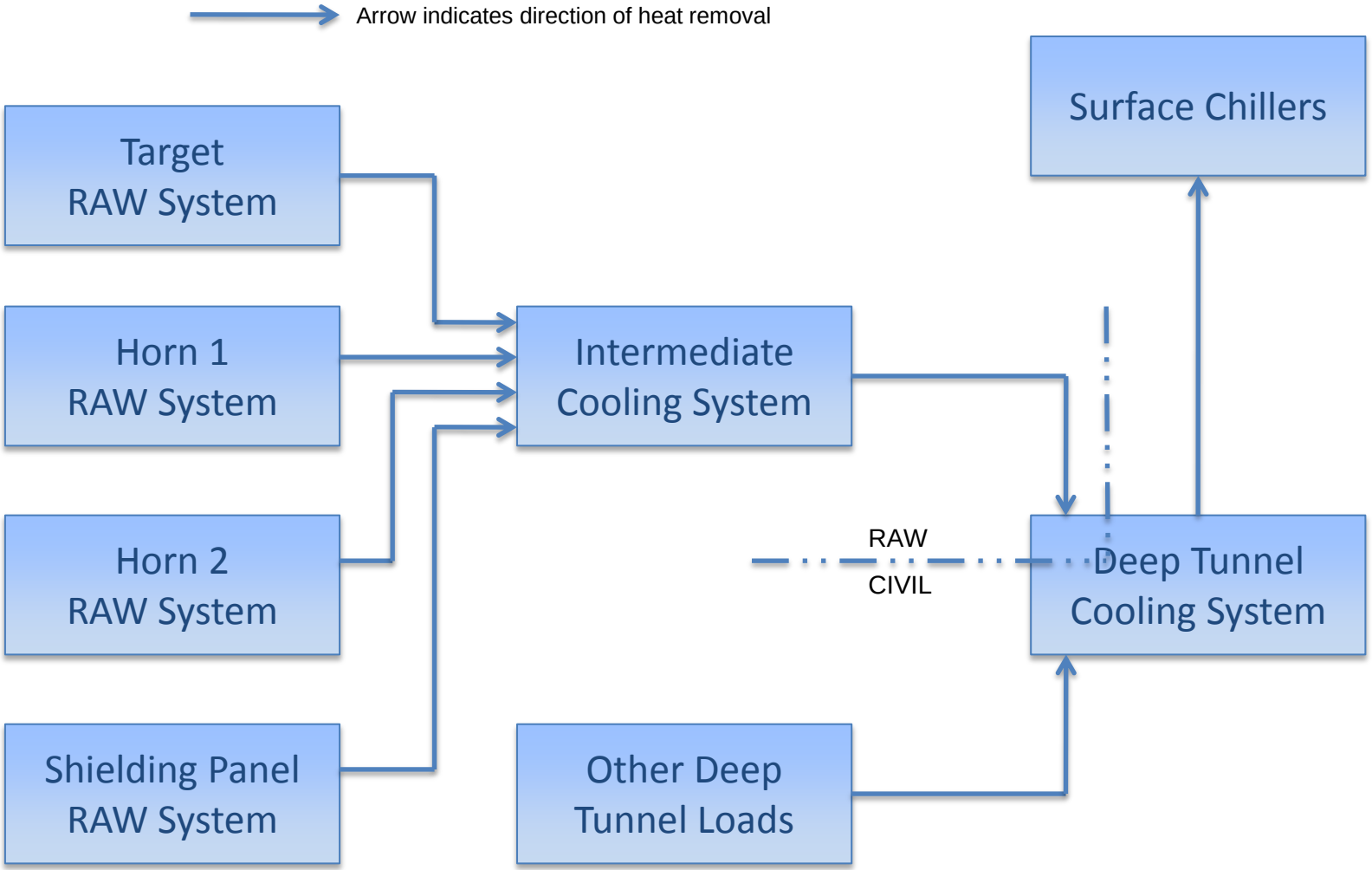
Arrow indicates direction of heat removal
Surface Chillers
Target RAW System
Horn 1 RAW System
Intermediate Cooling System
Horn 2 RAW System
RAW
CIVIL
Deep Tunnel Cooling System
Shielding Panel RAW System
Other Deep Tunnel Loads