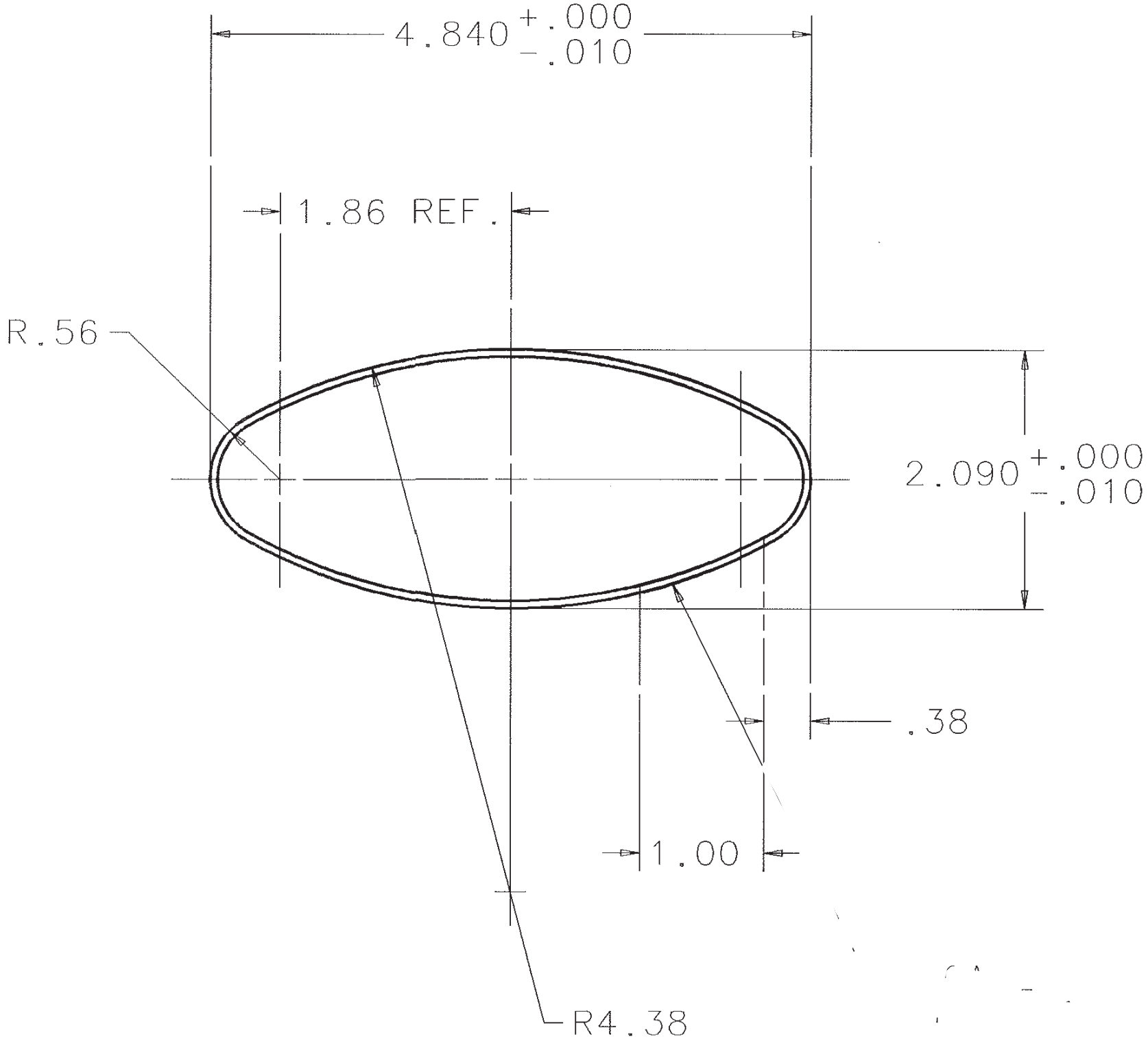
4.840 +.000 -.010
1.86 REF.
R.56
2.090 +.000 -.010
.38
1.00
R4.38