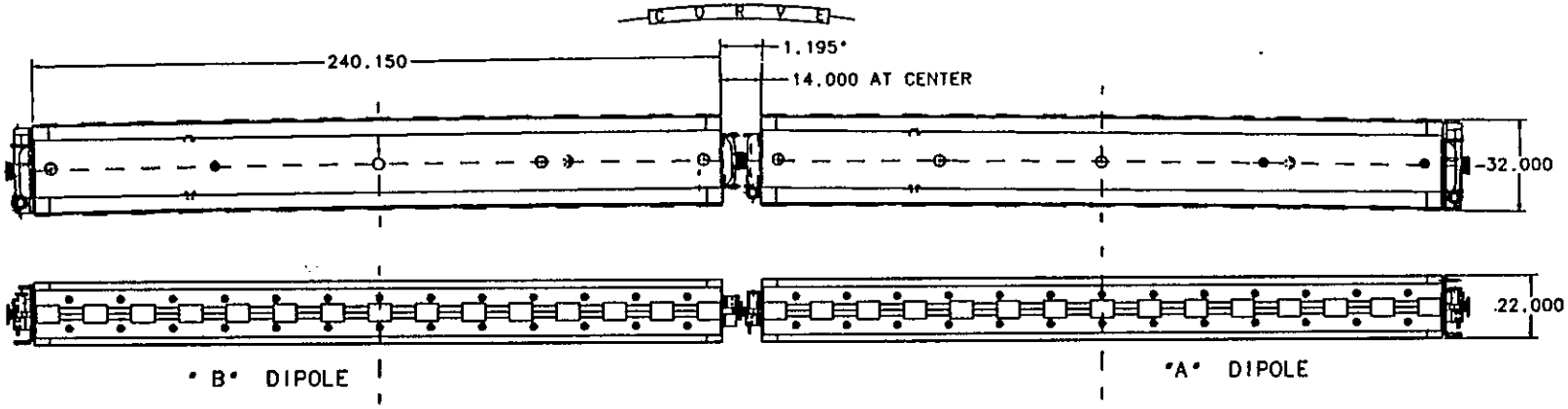

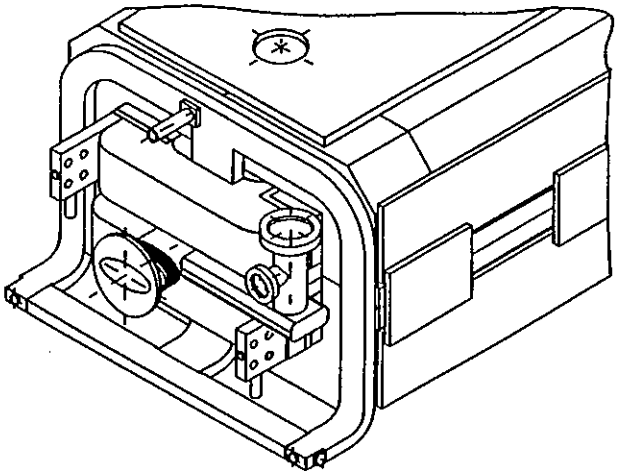

FMI DIPOLE
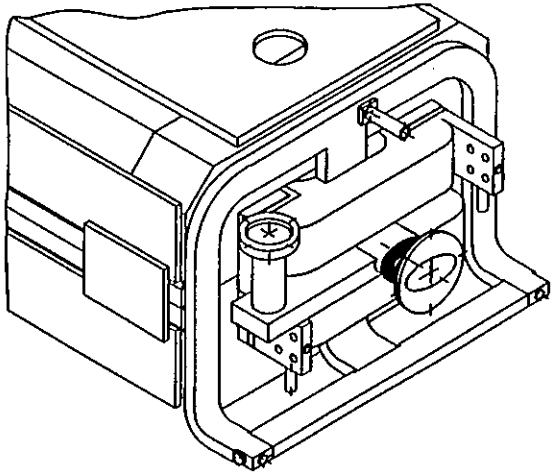
LEAD END VIEW
WITH BEAM TUBE INSTALLED
240" "A" & "B" MAGNETS